TOWN OF GEORGETOWN, MASSACHUSETTS
HIGHWAY DEPARTMENT
CULVERT AND ROADWAY UPGRADE AT
CENTRAL STREET (MA ROUTE 97) OVER PENN BROOK
MASSACHUSETTS EMERGENCY MANAGEMENT AGENCY (MEMA)
HAZARD MITIGATION GRANT PROGRAM (HMGP 1895-35)

SHEET INDEX

SHEET NO.	DESCRIPTION
1	LEGEND AND GENERAL NOTES
2	TRAFFIC MANAGEMENT PLAN
3	EXISTING CONDITIONS SITE PLAN
4	PROPOSED ROADWAY SITE PLAN
5	EROSION CONTROL PLAN
6	WATER DIVERSION PLAN
7	TYPICAL CROSS SECTION
8	36" RCP CULVERT LAYOUT AND DETAILS
9	BOX CULVERT LAYOUT AND DETAILS
10	CENTRAL STREET CROSS SECTION STA. 2+00 TO STA. 4+00
11	CENTRAL STREET CROSS SECTION STA. 5+00 TO STA. 7+00
12	CENTRAL STREET CROSS SECTION STA. 8+00 TO STA. 10+00
13	UTILITY RELOCATION PLAN
14	TEMPORARY BY-PASS (WATER MAIN) & DETAILS

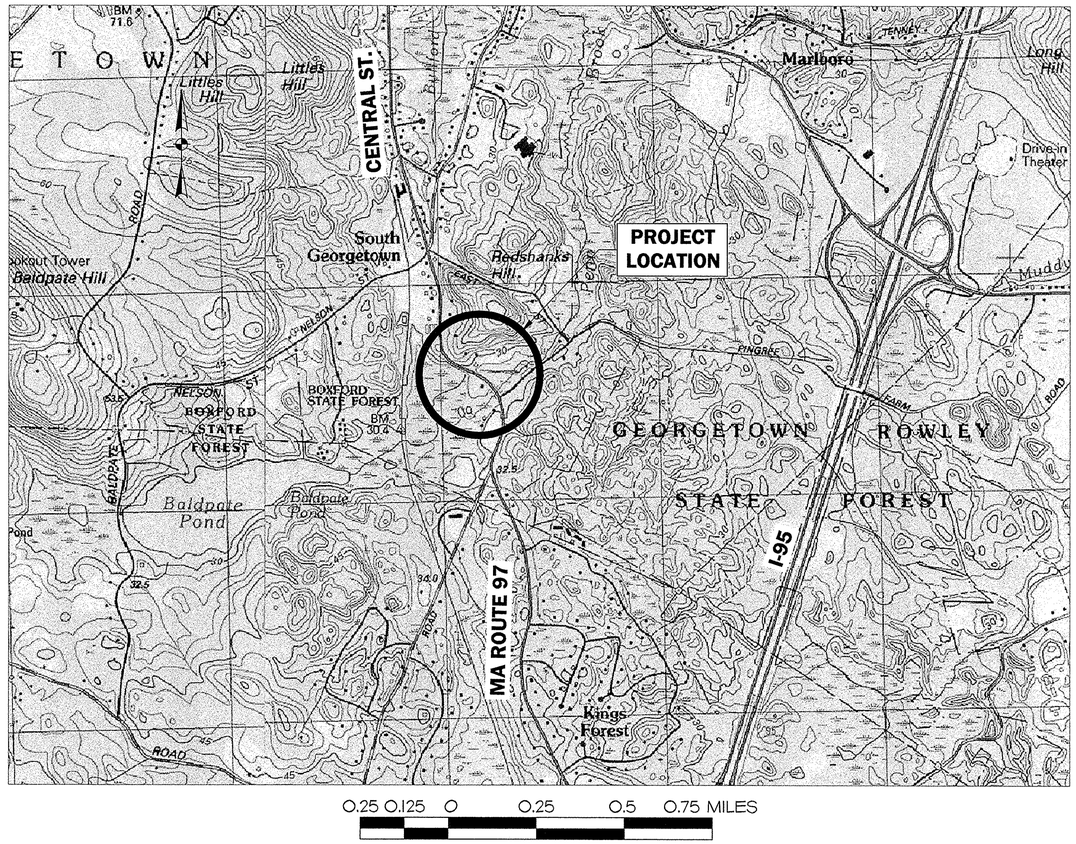

BOARD OF SELECTMEN
STUART EGENBERG, CHAIRMAN
GARY C. FOWLER
STEPHEN SMITH
C. DAVID SURFACE
PHILIP TRAPANI

TOWN ADMINISTRATOR
MICHAEL FARRELL

HIGHWAY DEPARTMENT SUPERVISOR
PETER DURKEE

Prepared by:

COUGHLIN ENVIRONMENTAL SERVICES, LLC

CONSULTING ENGINEERS AND PLANNERS

62 Montvale Avenue, Suite H
Stoneham, MA 02180-3637
Phone: (781) 832-1002
Fax: (781) 438-9654
Email: mail@coughlinenvironmental.com

DANIEL J. COUGHLIN CIVIL No. 32135 REGISTERED PROFESSIONAL ENGINEER COMMONWEALTH OF MASSACHUSETTS
5/1/15

MAY 2015

LEGEND

# 203	HOUSE NUMBER
2/31	ASSESSORS MAP/LOT NUMBER
● WCS	WATER CURB STOP
UP	UTILITY POLE W/ OVERHEAD WIRE & GUY
B11 B12	WETLAND FLAGGING
Ⓦ	WATER GATE
Ⓖ	GAS GATE
24" P	TREE DESIGNATION (24" DIAMETER PINE)
	HYDRANT
	SIGN
	STREET LINE (℄) / PROPERTY LINE (℘)
D	DRAIN LINE
E	ELECTRIC LINE
T	TELEPHONE LINE
CTV	CABLE TELEVISION LINE
W	WATER LINE
G	GAS LINE
	SILTATION BARRIER
	100 YEAR FLOOD PLAIN BOUNDARY
	MA D.E.P. WATER SUPPLY PROTECTION ZONE
	50' BUFFER ZONE TO RESOURCE AREA
	75' BUFFER ZONE TO RESOURCE AREA
	100' BUFFER ZONE TO RESOURCE AREA
BVW	BORDERING VEGETATED WETLAND
	WETLAND
SPK IN POLE 116.21	BENCHMARKS (NGVD 1929)
90	EXISTING MAJOR CONTOUR
89	EXISTING MINOR CONTOUR
91	PROPOSED CONTOUR

ABBREVIATIONS

A.C.	ASBESTOS CONCRETE
ALUM.	ALUMINUM
C.B.	CATCH BASIN
C.B.C.I.	CATCH BASIN CURB INLET
C.I.	CAST IRON PIPE
C.I.C.L.	CAST IRON PIPE, CEMENT LINED
C.L.D.I./D.I.C.L.	CEMENT LINED DUCTILE IRON/ DUCTILE IRON CEMENT LINED
C.M.P.	CORRUGATED METAL PIPE
CONC.	CONCRETE
D	DIAMETER
D.I.	DUCTILE IRON
DIAM.	DIAMETER
D.M.H.	DRAINAGE MANHOLE
D.W.C.H.D.P.E.	DOUBLE WALL CORRUGATED HIGH DENSITY POLYETHYLENE
E.P.	EDGE OF PAVEMENT
E.W.	EACH WAY
EXIST.	EXISTING
F.M.	FORCE MAIN
G.G.	GAS GATE
G.V.	GATE VALVE
GPM	GALLONS PER MINUTE
HMA	HOT MIX ASPHALT
H.H.	HANDHOLE
HYD.	HYDRANT
LBS.	POUNDS
LPS	LOW PRESSURE SEWER
M.B.	MAILBOX
MAX.	MAXIMUM
MIN.	MINIMUM
NPT	NATIONAL PIPE THREAD
N.T.S.	NOT TO SCALE
O.C.	ON CENTER
PC200	200 PSI CLASS PIPE
℘	PROPERTY LINE
PROP.	PROPOSED
P.S.	PRESSURE SEWER
P.S.I.	POUNDS PER SQUARE INCH
P.V.C.	POLYVINYL CHLORIDE
R.C.P.	REINFORCE CONCRETE PIPE
R.O.W.	RIGHT OF WAY
REQ.	REQUIRED
℄	STREET LINE
S.B.	STONE BOUND
S.S.	STAINLESS STEEL
STL	STEEL
T.M.H.	TELEPHONE MANHOLE
T.S.&V.	TAPPING SLEEVE AND VALVE
T.W.	TEMPORARY WATER MAIN
TYP.	TYPICAL
U.L.P.	UTILITY LIGHT POLE
U.P.	UTILITY POLE
V.C.	VITRIFIED CLAY PIPE
W/	WITH
W.G.	WATER GATE
W.M./M.P.	WATER METER PIT
ø	DIAMETER

NOTES

1. UNDERGROUND UTILITY INFORMATION SHOWN ON THESE PLANS WAS OBTAINED FROM:
   NATIONAL GRID
   GEORGETOWN MUNICIPAL LIGHT DEPARTMENT
   VERIZON
   FIELD OBSERVATIONS
   TOWN OF GEORGETOWN WATER DEPARTMENT
2. DIG SAFE SHALL BE NOTIFIED PRIOR TO THE COMMENCEMENT OF CONSTRUCTION AND THE CONTRACTOR SHALL ALSO OBTAIN A MARK OUT BY THE GEORGETOWN WATER DEPARTMENT TO DETERMINE THE LOCATION OF ALL UNDERGROUND UTILITIES AND STRUCTURES.
3. THE LOCATION OF EXISTING UNDERGROUND UTILITIES ARE SHOWN IN AN APPROXIMATE WAY ONLY AND HAVE NOT BEEN INDEPENDENTLY VERIFIED BY THE OWNER OR ITS REPRESENTATIVE. THE CONTRACTOR SHALL DETERMINE THE EXACT LOCATION OF ALL EXISTING UTILITIES BEFORE COMMENCING WORK, AND AGREES TO BE FULLY RESPONSIBLE FOR ANY AND ALL COSTS FOR DAMAGES WHICH MIGHT BE OCCASIONED BY THE CONTRACTOR'S FAILURE TO EXACTLY LOCATE AND PRESERVE ANY AND ALL UNDERGROUND UTILITIES.
4. THE CONTRACTOR SHALL NOTIFY ALL PUBLIC AND PRIVATE UTILITIES REQUIRED AND VERIFY THE LOCATION OF ALL EXISTING SUBSURFACE UTILITIES PRIOR TO PERFORMING ANY WORK. THE CONTRACTOR SHALL IMMEDIATELY REPORT TO THE ENGINEER ANY DISCREPANCIES BETWEEN CONDITIONS SHOWN ON THE PLANS AND ACTUAL FIELD CONDITIONS.
5. WHERE AN EXISTING UTILITY IS FOUND TO CONFLICT WITH THE PROPOSED WORK, THE LOCATION, ELEVATION AND SIZE OF THE UTILITY SHALL BE ACCURATELY DETERMINED WITHOUT DELAY BY THE CONTRACTOR THROUGH TEST PITTING OPERATION, AND THE INFORMATION FURNISHED TO THE ENGINEER FOR RESOLUTION OF THE CONFLICT. EXTRA WORK AND/OR DELAY CLAIMS SHALL NOT BE CONSIDERED BY THE OWNER AS A RESULT OF THE CONTRACTOR NOT ADEQUATELY VERIFYING EXISTING UTILITY DATA IN ADVANCE OF CULVERT FABRICATION, DELIVERY AND CONSTRUCTION.
6. ALL EXISTING UTILITIES SHALL BE MAINTAINED IN PLACE AND KEPT OPERATIONAL DURING CONSTRUCTION EXCEPT AS NOTED ON THE CONTRACT DRAWINGS OR SPECIFICATIONS. ANY UNSPECIFIED DISRUPTION TO OR ABANDONMENT OF EXISTING UTILITIES SHALL BE SUBJECT TO THE WRITTEN APPROVAL OF THE ENGINEER.
7. ALTHOUGH NOT ANTICIPATED, ACTUAL FIELD CONDITIONS MAY REQUIRE MODIFICATIONS TO THE WORK CALLED FOR UNDER THIS CONTRACT. THE CONTRACTOR SHALL PERFORM THE WORK IN ACCORDANCE WITH FIELD CONDITIONS WITH PRIOR WRITTEN APPROVAL OF THE ENGINEER.
8. AREAS OUTSIDE THE LIMITS OF PROPOSED WORK DISTURBED BY THE CONTRACTOR'S OPERATIONS SHALL BE RESTORED BY THE CONTRACTOR TO THEIR ORIGINAL CONDITION AT THE CONTRACTOR'S EXPENSE.
9. PLANS SHOWN WERE DEVELOPED FROM BEST AVAILABLE INFORMATION SUPPLIED BY THE TOWN, INCLUDING TOWN ASSESSORS MAPS. FIELD SURVEY VERIFICATION WAS MADE UTILIZING INSTRUMENT SURVEY AND/OR MEASURING WHEEL. ALL PROPERTY LINES ARE SHOWN IN APPROXIMATE FASHION AND SHOULD BE VERIFIED WITH PROPERTY OWNERS PRIOR TO COMMENCING WORK.
10. ALL BLASTING OPERATIONS IF REQUIRED SHALL BE PERFORMED IN STRICT CONFORMANCE WITH THE STATE OF MASSACHUSETTS BOARD OF FIRE PREVENTION REGULATION 527 CMR SECTION 13.00 AND ALL LOCAL REGULATIONS.
11. HAY BALES, SILT FENCE, WATTLES, OR GEOTEXTILE WRAP ARE TO BE INSTALLED AROUND WORK SITE AND OTHER ADJACENT AREAS TO PROTECT WETLANDS ADJACENT TO THE WORK, AS NOTED ON THE PLANS, AS SPECIFIED IN THE WETLAND PERMITTING DOCUMENTS, AND/OR AS DIRECTED BY THE ENGINEER. EROSION CONTROL MEASURES ARE TO BE REMOVED AFTER PAVING IS COMPLETED AND AFTER RECEIVING APPROVAL FROM THE GEORGETOWN CONSERVATION AGENT, ALL IMPACTED AREAS SHALL BE LOAMED AND HYDROSEEDED TO ESTABLISH A STABLE STAND OF COVER.
12. THE TERM "NEW" OR "PROPOSED" MEANS WORK TO BE CONSTRUCTED USING NEW MATERIALS.
13. VERTICAL DATUM: NATIONAL GEODETIC VERTICAL DATUM (NGVD) 1929.
14. PRIOR TO BIDDING, CONTRACTOR SHALL VISIT PROJECT LOCATIONS TO BECOME COMPLETELY FAMILIAR WITH EXISTING CONDITIONS.
15. WETLAND INFORMATION WAS OBTAINED FROM MASS GIS DATABASE AND AS OBSERVED IN THE FIELD. DELINEATION FLAGGING AND LOCATION WAS PROVIDED BY GEORGETOWN CONSERVATION AGENT.
16. THE CONTRACTOR SHALL COMPLY WITH THE REQUIREMENTS OF ALL ORDER OF CONDITIONS AND SUPERCEDING ORDERS ESTABLISHED FOR THIS PROJECT.
17. PROPOSED UTILITY LOCATIONS ARE SUBJECT TO BE CHANGED BASED ON SITE CONDITIONS ENCOUNTERED AND ACTUAL PROPERTY LINE LOCATIONS ESTABLISHED DURING CONSTRUCTION, WITH THE APPROVAL OF THE ENGINEER.
18. A PLASTIC DEBRIS COLLECTION FENCE SHALL BE INSTALLED DOWN STREAM OF WORK AREA TO CATCH ANY FLOATING CONSTRUCTION DEBRIS DURING PROJECT FIELD CONSTRUCTION EFFORTS.

CIVIL: DANIEL J. CROUGHLIN CIVIL No. 47758 REGISTERED PROFESSIONAL ENGINEER COMMONWEALTH OF MASSACHUSETTS

REV.	DESCRIPTION	DATE

DRW: AAS DSG: AAS CHK: DJC

LEGEND AND GENERAL NOTES

CULVERT AND ROADWAY UPGRADE AT CENTRAL ST. (MA RTE 97) OVER PENN BROOK
MASSACHUSETTS EMERGENCY MANAGEMENT AGENCY
HAZARD MITIGATION GRANT PROGRAM
HMGP 1895-35
Prepared For
TOWN OF GEORGETOWN
GEORGETOWN, MASSACHUSETTS

COUGHLIN ENVIRONMENTAL SERVICES, LLC
CONSULTING ENGINEERS AND PLANNERS
62 Montvale Avenue
Stoneham, MA 02180-3637
Phone: (781) 832-1002
Fax: (781) 438-9654
Email: mail@coughlinenvironmental.com

DATE: MAY 2015
Q:\Projects\2510-02 Central HMGP\legend.dwg
CES NO.: 2510-02 SCALE: N.T.S.

© 2014 COUGHLIN ENVIRONMENTAL SERVICES, LLC

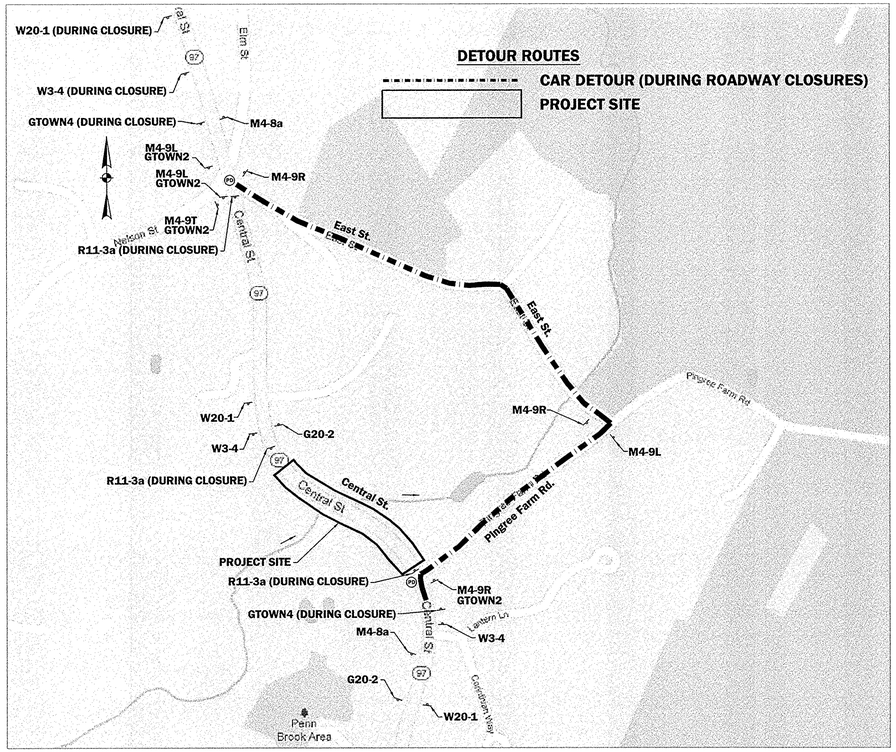

CAR DETOUR PLAN

SCALE: N.T.S.

NOTES:

1. DURING CONSTRUCTION HOURS, CONTRACTOR SHALL MAINTAIN ONE–LANE, TWO–WAY TRAFFIC CONTROL WITH THE USE OF TWO POLICE DETAILS.
2. FULL ROADWAY CLOSURES WILL BE PERMITTED ONLY DURING THE INSTALLATION OF THE CULVERTS AND CLOSURE PERIOD SHALL BE NO LONGER THAN FOUR (4) CONSECUTIVE WEEKS TOTAL FOR BOTH CULVERTS.
3. DURING NON–CONSTRUCTION HOURS, BOTH LANES SHALL BE OPEN TO TRAFFIC WITH ADEQUATE WARNING DEVICES (TO BE APPROVED BY THE ENGINEER) IN PLACE TO ALERT MOTORISTS OF ANY HAZARDS.
4. SIGNS ARE TO BECOME THE PROPERTY OF THE TOWN UPON COMPLETION OF CONSTRUCTION.
5. TEMPORARY TRAFFIC SIGNS SHALL BE NEW .080 INCH THICK FLAT ALUMINUM REFLECTIVE SHEETING APPLIED OVER THE SURFACE. THE LETTERING AND BACKGROUND ARE BOTH TO BE REFLECTIVE.
6. ALL DETOUR ROUTE SIGNS (M4–8a, M4–9L, M4–9T, M4–9R, GTOWN1, GTOWN2, GTOWN3) SHALL BE BAGGED DURING NON–CLOSURE PERIODS.
7. DURING ONE LANE CLOSURE PERIODS, CONTRACTOR SHALL CONFORM WITH THE "ONE LANE CLOSURE PLAN" AS DETAILED ON THIS PLAN SHEET. GTOWN4 SIGN SHALL BE SUBSTITUTED FOR "POLICE OFFICER AHEAD" SIGN.
8. JERSEY BARRIERS SHALL BE UTILIZED DURING PERIODS OF FULL ROADWAY CLOSURE AT THE PROJECT SITE LIMITS.

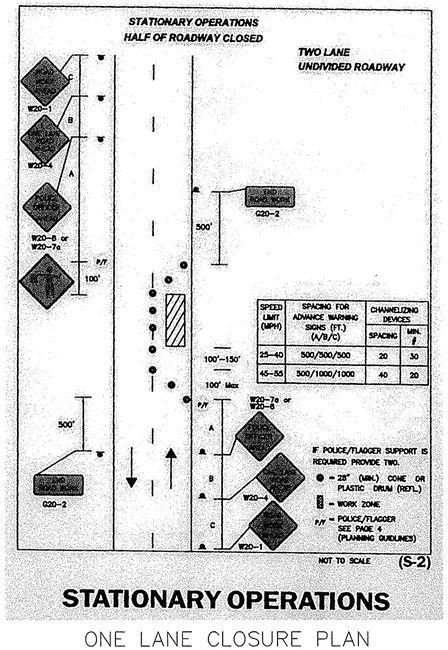

STATIONARY OPERATIONS

ONE LANE CLOSURE PLAN

SCALE: N.T.S.

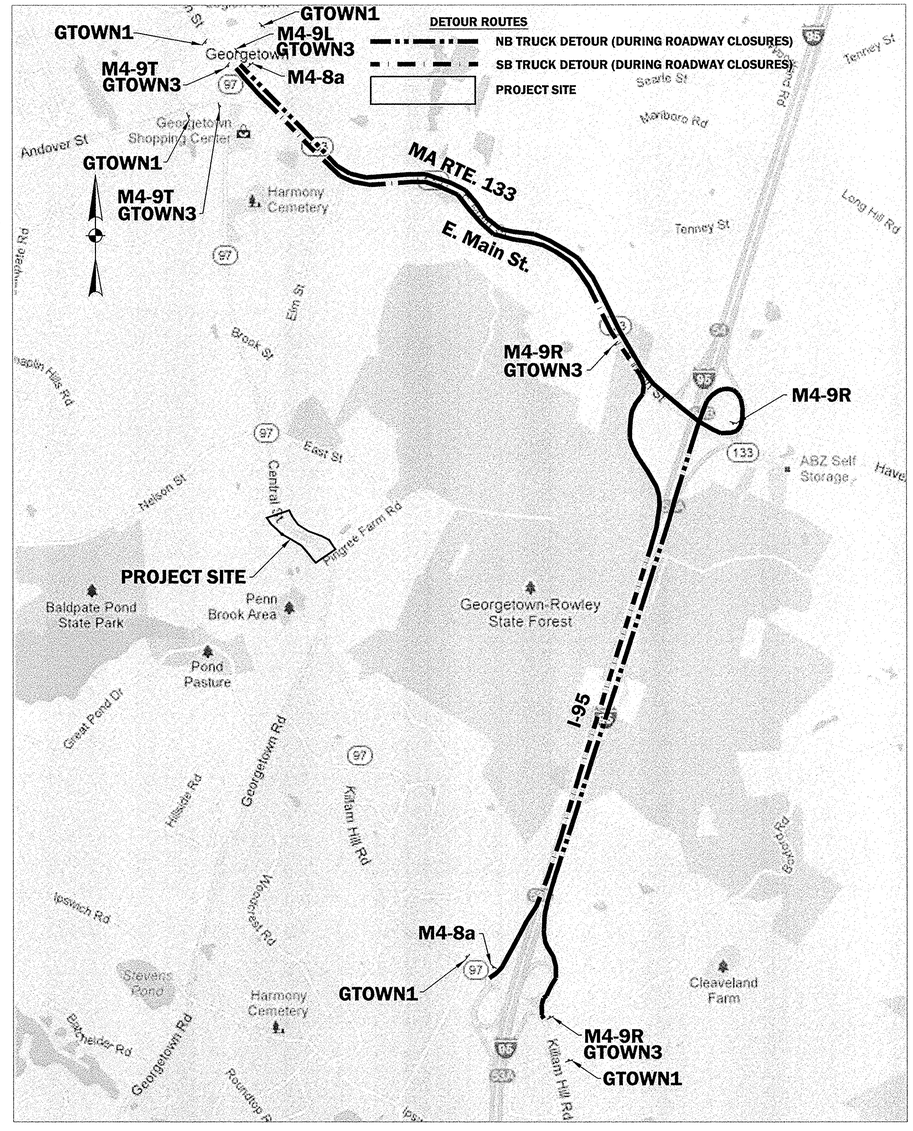

TRUCK DETOUR PLAN

SCALE: N.T.S.

TRAFFIC SIGN SUMMARY

MUTCD #	SIGN	QUAN.	DIM.	MUTCD #	SIGN	QUAN.	DIM.	MUTCD #	SIGN	QUAN.	DIM.
G20–2	END ROAD WORK	2	48"x24"	M4–9R	RTE. 97 DETOUR	6	48"x30"	GTOWN1	RTE. 97 CLOSED TO TRUCK TRAFFIC AT PENN BROOK. SEEK ALT. ROUTE	5	54"x36"
M4–8a	END RTE. 97 DETOUR	4	48"x30"	R11–3a	ROAD CLOSED LOCAL TRAFFIC ONLY	3	60"x30" W/STAND	GTOWN2	CARS ONLY	4	48"x12"
M4–9L	RTE. 97 DETOUR	4	48"x30"	W3–4	BE PREPARED TO STOP	3	36"x36"	GTOWN3	TRUCKS	5	48"x12"
M4–9T	RTE. 97 DETOUR	3	48"x30"	W20–1	ROAD WORK AHEAD	3	36"x36"	GTOWN4	REDUCE SPEED OFFICER AHEAD IN ROAD	2	54"x36" W/ STAND
				W20–4	ONE LANE ROAD WORK AHEAD	2	36"x36"	PD	POLICE DETAIL	2	

REV.	DESCRIPTION	DATE

DRW: AAS DSG: AAS CHK: DJC

CIVIL: DAVID J. CAMPBELL No. 43334 CIVIL STATE OF MASSACHUSETTS 5/11/15

TRAFFIC MANAGEMENT PLAN

CULVERT AND ROADWAY UPGRADE AT CENTRAL ST. (MA RTE 97) OVER PENN BROOK

MASSACHUSETTS EMERGENCY MANAGEMENT AGENCY

HAZARD MITIGATION GRANT PROGRAM HMGP 1895-35

Prepared For

TOWN OF GEORGETOWN GEORGETOWN, MASSACHUSETTS

COUGHLIN ENVIRONMENTAL SERVICES, LLC

CONSULTING ENGINEERS AND PLANNERS

62 Montvale Avenue
Stoneham, MA 02180-3637
Phone: (781) 832-1002
Fax: (781) 438-9654
Email: mail@coughlinenvironmental.com

DATE: MAY 2015

Q:\Projects\2510-02\CAD\TMP.dwg

CES NO.: 2510-02 SCALE: N.T.S.

© 2014 COUGHLIN ENVIRONMENTAL SERVICES, LLC

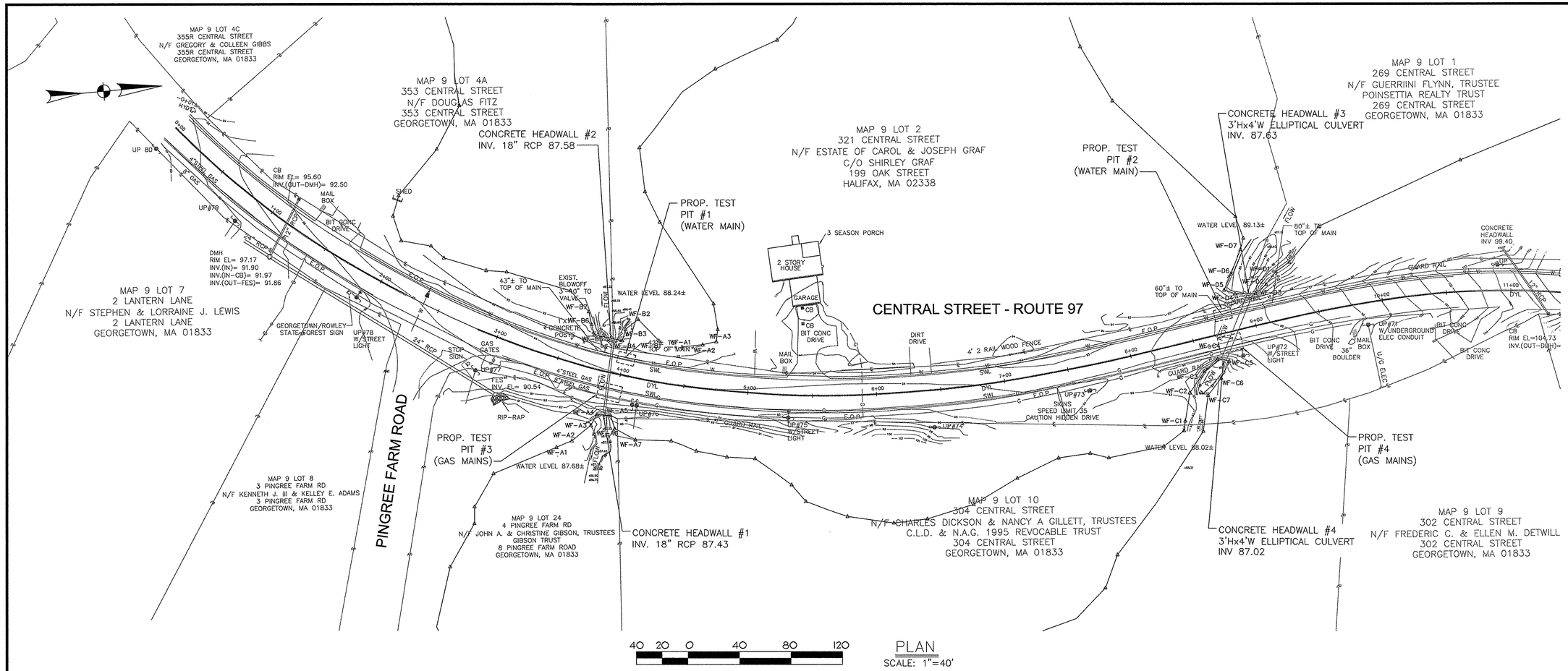

40 20 0 40 80 120

PLAN
SCALE: 1"=40'

GENERAL NOTES,

1. ALL TEST PITS SHALL BE CONDUCTED WITHIN 10 DAYS OF CONTRACT EXECUTION TO IDENTIFY CONFLICTS AND UTILITY RELOCATION NEEDS.
2. UTILITY REPRESENTATIVES AND THE ENGINEER SHALL BE PRESENT FOR ALL TEST PIT WORK.
3. TEST PIT AREAS SHALL HAVE PAVEMENT RESTORED AFTER EXCAVATION AND LOGGING OF UTILITY DATA IS COMPLETE. CONTRACTOR SHALL PROVIDE FIELD SKETCHES AND DETAILS SHOWING VERTICAL DEPTHS AND LOCATIONS OF UTILITIES AS WELL AS PIPE SIZE, MATERIAL AND CONDITIONS OBSERVED AS PART OF THEIR TEST PIT ACTIVITIES AND DELIVER TO THE ENGINEER WITHIN 10 DAYS OF COMPLETING EXCAVATION WORK.

CIVIL:

DASHEL M. COUGHLIN JR. CIVIL No. 23359 REGISTERED PROFESSIONAL ENGINEER MASSACHUSETTS

5/1/15

DRW: AAS	DSG: AAS	CHK: DJC	
REV.	DESCRIPTION		DATE

EXISTING CONDITIONS SITE PLAN AND TEST PIT LOCATIONS

CULVERT AND ROADWAY UPGRADE AT CENTRAL ST. (MA RTE 97) OVER PENN BROOK
MASSACHUSETTS EMERGENCY MANAGEMENT AGENCY
HAZARD MITIGATION GRANT PROGRAM
HMGP 1895-35
Prepared For
TOWN OF GEORGETOWN
GEORGETOWN, MASSACHUSETTS

COUGHLIN ENVIRONMENTAL SERVICES, LLC
CONSULTING ENGINEERS AND PLANNERS
62 Montvale Avenue
Stoneham, MA 02180-3637
Phone: (781) 832-1002
Fax: (781) 438-9654
Email: mail@coughlinenvironmental.com

DATE: MAY 2015
Q:\Projects\2510-02 Central HMGP\base.dwg
CES NO.: 2510-02 | SCALE: 1" = 40'

© 2015 COUGHLIN ENVIRONMENTAL SERVICES, LLC

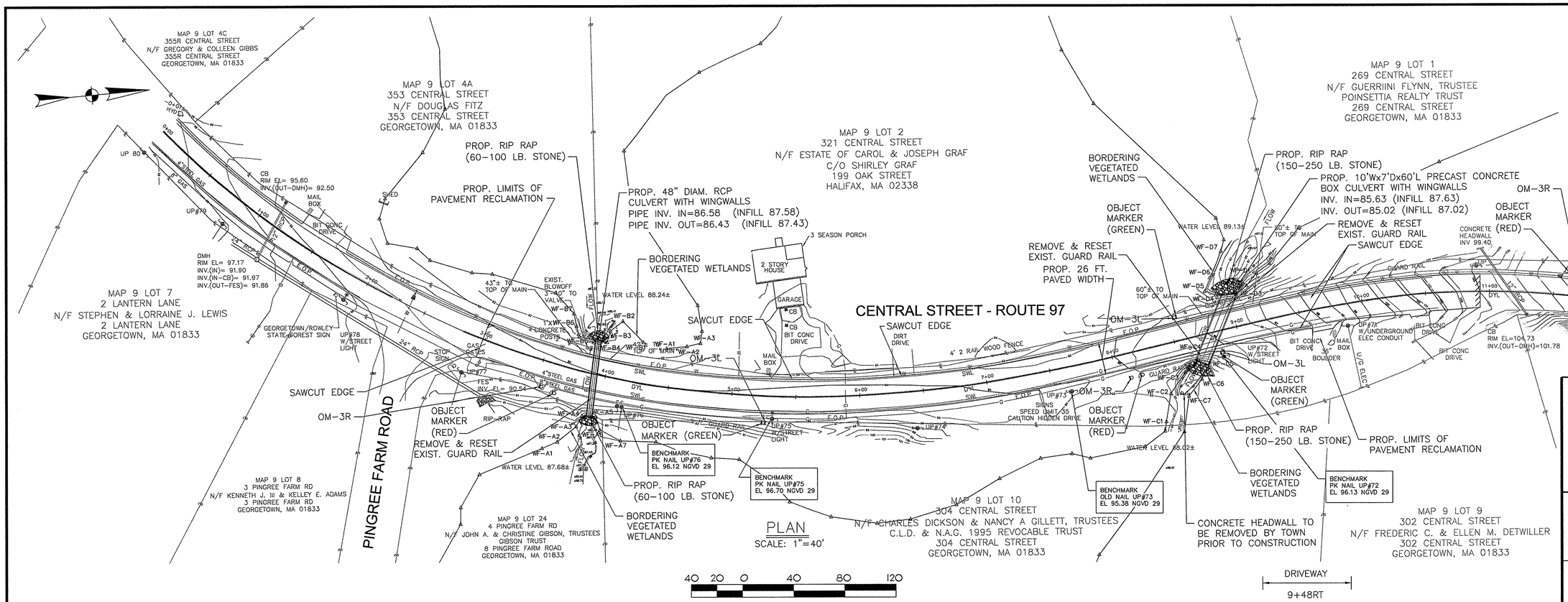

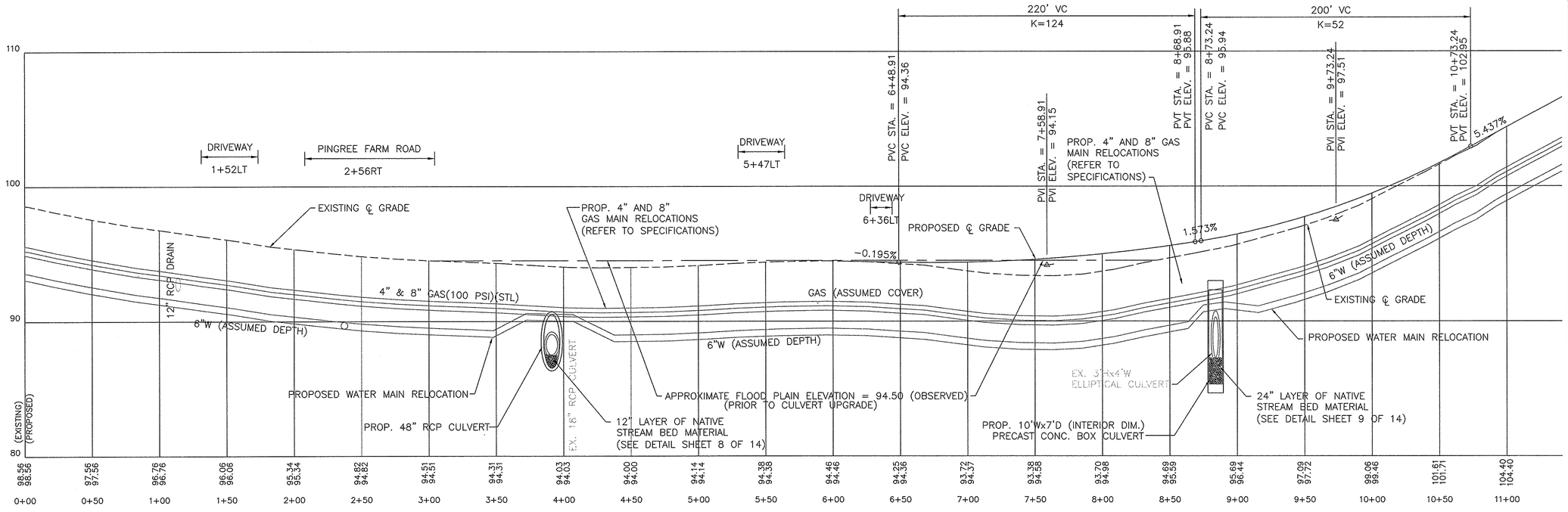

REV.	DESCRIPTION	DATE
1	REVISED PROP. PROFILE	2/11/2016

DRW: AAS DSG: AAS CHK: DJC

CIVIL: DANIEL J. COUGHLIN No. 35824 CIVIL

PROPOSED ROADWAY SITE PLAN

CULVERT AND ROADWAY UPGRADE AT CENTRAL ST. (MA RTE 97) OVER PENN BROOK

MASSACHUSETTS EMERGENCY MANAGEMENT AGENCY

HAZARD MITIGATION GRANT PROGRAM HMGP 1895-35

Prepared For

TOWN OF GEORGETOWN GEORGETOWN, MASSACHUSETTS

COUGHLIN ENVIRONMENTAL SERVICES, LLC

CONSULTING ENGINEERS AND PLANNERS

62 Montvale Avenue
Stoneham, MA 02180-3637
Phone: (781) 832-1002
Fax: (781) 438-9654
Email: mail@coughlinenvironmental.com

DATE: MAY 2015

Q:\Projects\2510-02 Central HMGP\base.dwg

CES NO.: 2510-02 SCALE: 1" = 40'

© 2015 COUGHLIN ENVIRONMENTAL SERVICES, LLC

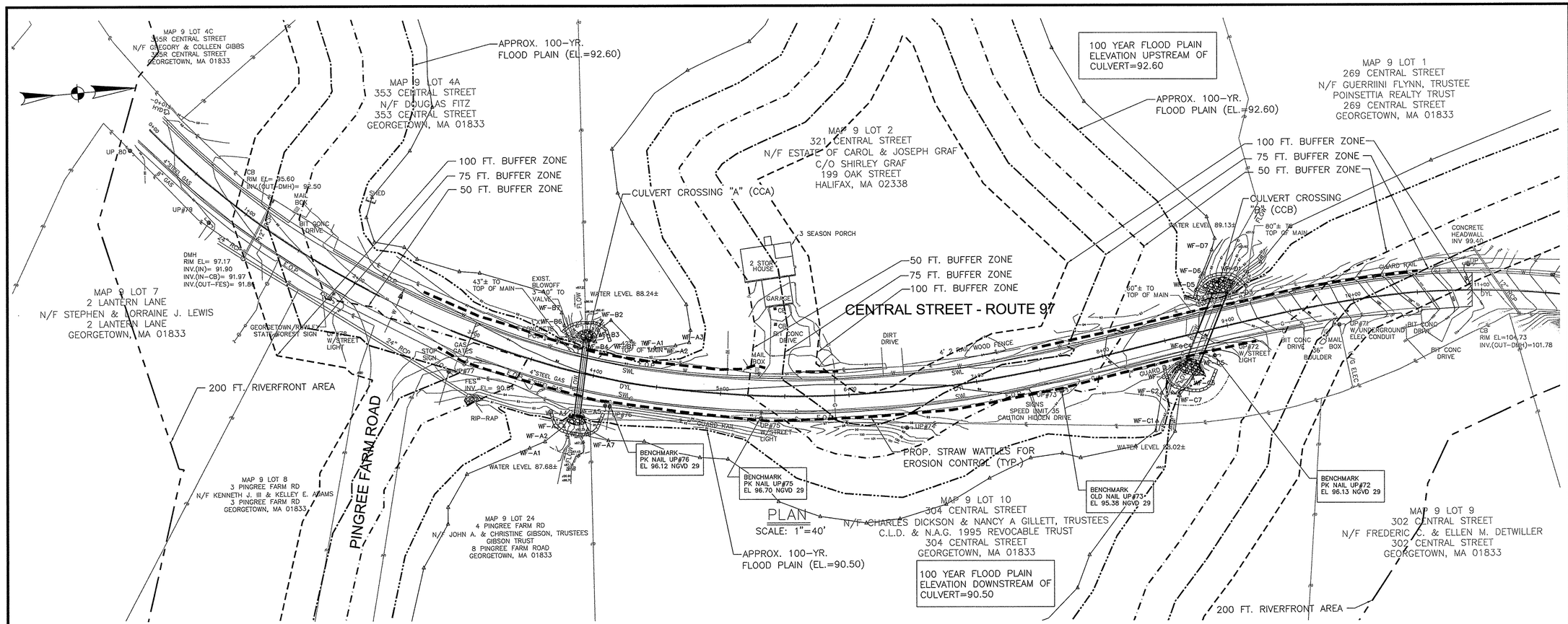

PLAN
SCALE: 1"=40'

LEGEND

- EROSION CONTROL
- COFFER DAM/FLOW CONTROL
- FLOATING DEBRIS COLLECTION NET/FENCE

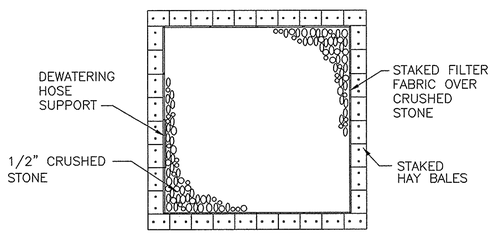

DEWATERING BASIN (CLEAR WATERS ONLY)

N.T.S.

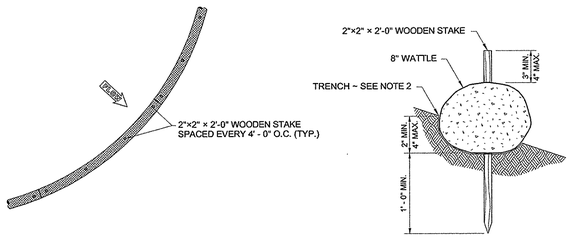

STRAW WATTLE EROSION CONTROL DETAILS

N.T.S.

NOTES:
1. INSTALL WATTLES ALONG CONTOURS. KNOT EACH END OF THE WATTLES TOGETHER BEFORE STAKING.
2. WATTLES TO BE BACKFILLED OR DUG-IN TO REDUCE RISK OF FLOW UNDER BARRIER.

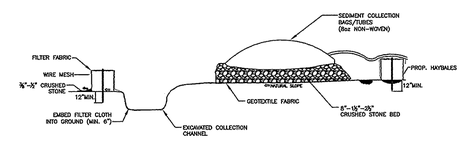

DEWATERING BAG DETAIL - ELEVATION

N.T.S.

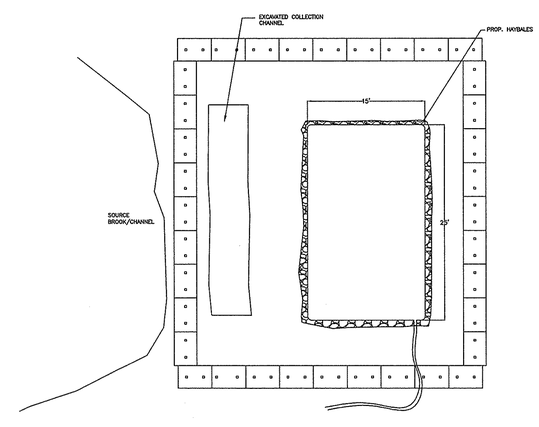

DEWATERING BAG DETAIL - PLAN VIEW

N.T.S.

© 2015 COUGHLIN ENVIRONMENTAL SERVICES, LLC

DRW: AAS	DSG: AAS	CHK: DJC		
2	ADDED 100-YR FLOOD PLAIN LINES		4/15/2014	
1	REVISED LIMITS OF WORK		2/11/2014	
REV.	DESCRIPTION		DATE	

CIVIL:

EROSION CONTROL PLAN

CULVERT AND ROADWAY UPGRADE AT CENTRAL ST. (MA RTE 97) OVER PENN BROOK
MASSACHUSETTS EMERGENCY MANAGEMENT AGENCY
HAZARD MITIGATION GRANT PROGRAM
HMGP 1895-35

Prepared For

TOWN OF GEORGETOWN
GEORGETOWN, MASSACHUSETTS

COUGHLIN ENVIRONMENTAL SERVICES, LLC
CONSULTING ENGINEERS AND PLANNERS
62 Montvale Avenue
Stoneham, MA 02180-3637
Phone: (781) 832-1002
Fax: (781) 438-9654
Email: mail@coughlinenvironmental.com

DATE: MAY 2015
Q:\Projects\2510-02 Central HMGP\base.dwg
CES NO.: 2510-02 | SCALE: 1" = 40'

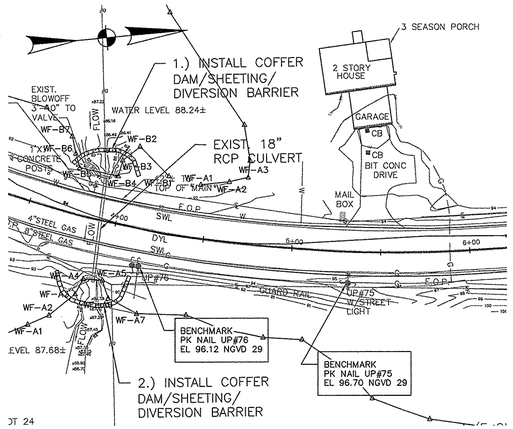

1. SETUP DIVERSION AT CULVERT CROSSING "A" (CCA)

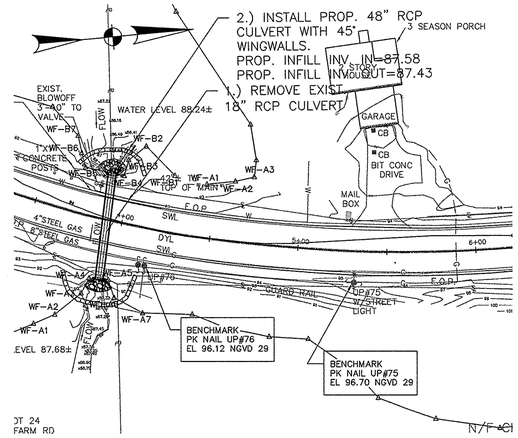

2. CULVERT REPLACEMENT AT CULVERT CROSSING "A" (CCA)

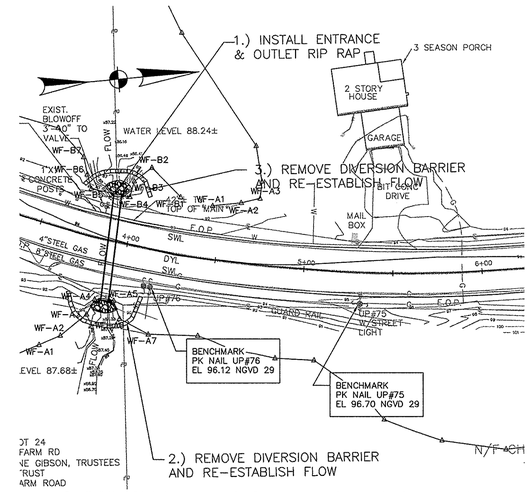

3. REMOVE DIVERSION/RE-ESTABLISH FLOW

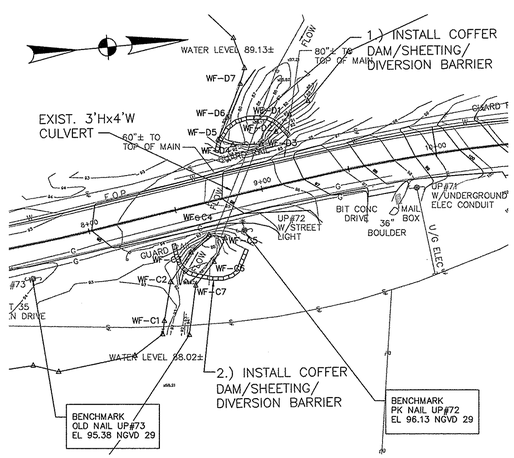

4. DIVERT CULVERT CROSSING "B" (CCB)

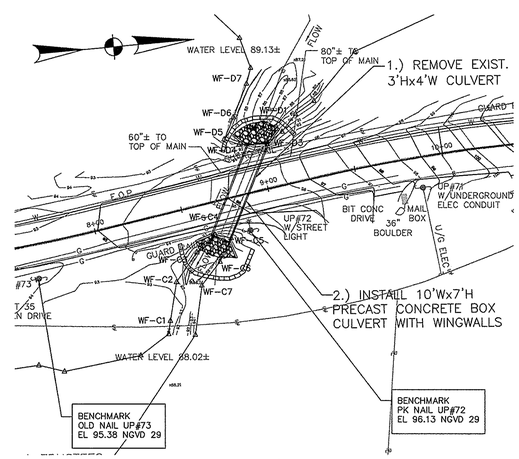

5. CULVERT REPLACEMENT AT CULVERT CROSSING "B" (CCB)

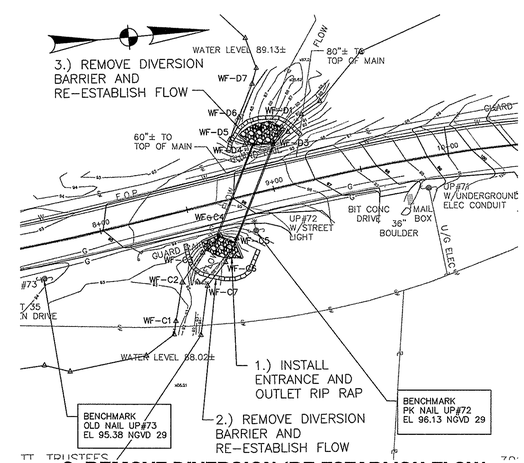

6. REMOVE DIVERSION/RE-ESTABLISH FLOW

PROPOSED FLOW CONTROL SEQUENCE

1.) INSTALL FLOW CONTROL FOR CCA
2.) ESTABLISH NECESSARY DEWATERING AND SILTATION CONTROL MEASURES.
3.) CONSTRUCT CCA (48" RCP CULVERT).
4.) STABILIZE INLET, OUTLET STREAM BED AND BANKS.
5.) RESTORE FLOW.
6.) REPEAT 1 THROUGH 5 FOR CCB (BOX CULVERT).

© 2015 COUGHLIN ENVIRONMENTAL SERVICES, LLC

REV.	DESCRIPTION	DATE

DRW: AAS DSG: AAS CHK: DJC

CIVIL:

DANIEL J. COUGHLIN CIVIL Reg. 33316 COMMONWEALTH OF MASSACHUSETTS

5/11/15

WATER DIVERSION PLAN

CULVERT AND ROADWAY UPGRADE AT CENTRAL ST. (MA RTE 97) OVER PENN BROOK
MASSACHUSETTS EMERGENCY MANAGEMENT AGENCY
HAZARD MITIGATION GRANT PROGRAM
HMGP 1895-35
Prepared For
TOWN OF GEORGETOWN
GEORGETOWN, MASSACHUSETTS

COUGHLIN ENVIRONMENTAL SERVICES, LLC
CONSULTING ENGINEERS AND PLANNERS
62 Montvale Avenue
Stoneham, MA 02180-3637
Phone: (781) 832-1002
Fax: (781) 438-9654
Email: mail@coughlinenvironmental.com

DATE: MAY 2015
Q:\Projects\2510-02 Central HMGP\base.dwg
CES NO.: 2510-02 SCALE: 1" = 40'

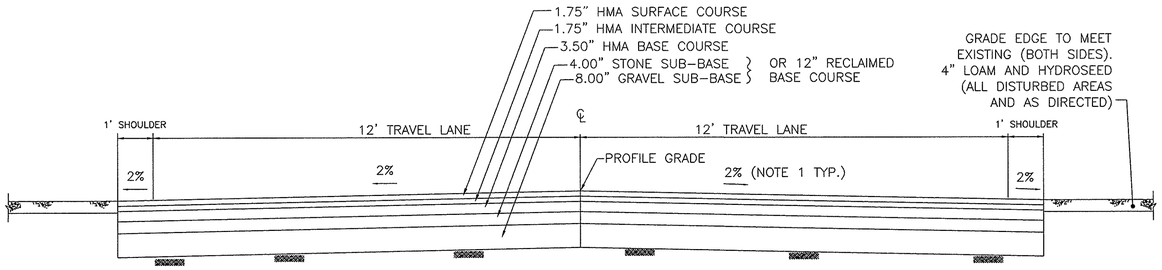

TYPICAL ROADWAY SECTION – CENTRAL STREET

SCALE: 1" = 2'

PAVEMENT DESIGN (TYP.)

PAVEMENT
1.75" HMA SURFACE COURSE
1.75" HMA INTERMEDIATE COURSE
3.50" HMA BASE COURSE

SUB-BASE
4" STONE & 8" GRAVEL
OR 12" RECLAIMED BASE COURSE

PAVEMENT NOTES

1. NORMAL CROSS SLOPE IS 2% BUT MAY VARY AS DEFINED ON THE PLANS.
2. WHERE THERE IS INSUFFICIENT RECLAIMED PAVEMENT, PROVIDE GRAVEL BORROW (TYPE b) TO BE BLENDED WITH THE PULVERIZED MATERIAL IN QUANTITIES TO PRODUCE A UNIFORM BLEND SUITABLE FOR USE AS BASE COURSE (MIX IN PLACE).
3. UNSUITABLE MATERIAL IN THE SUBGRADE SHALL BE REMOVED TO THE LINES AND DEPTHS ESTABLISHED BY THE ENGINEER AND REPLACED WITH GRAVEL BORROW OR RECLAIMED BASE COURSE.
4. GUARDRAIL LOCATIONS DEPICTED ON PLAN.

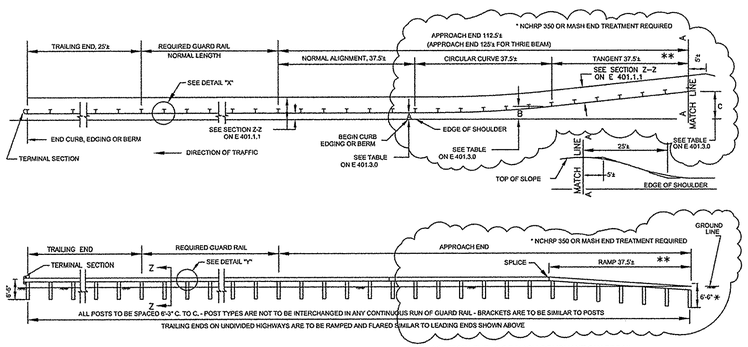

NCHRP 350 TEST LEVEL 3 OR MASH COMPLIANT GUARDRAIL TERMINAL SECTIONS ON ALL ROADWAYS WITH DESIGN SPEED OF 50 MPH OR GREATER.
BURIED ENDS ONLY FOR ROADWAYS WITH SPEEDS LESS THAN 50 MPH.

* STANDARD LENGTH POST TO BE USED IN RAMPED SECTIONS.
** 50' FOR THRIE BEAM.

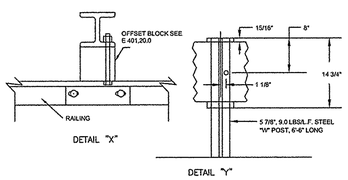

NOTES:
1. THIS METHOD OF INSTALLATION IS APPLICABLE WHEN THE EMBANKMENT SLOPE ADJACENT TO THE ROADWAY IS 1V:2H OR STEEPER.
2. WHEN PLACED IN MEDIAN, CHANGE TO THRIE BEAM AND HEIGHT 2'-8 1/2"±1". FOR SECTION Z-Z, (NOTE 1, HEIGHT IS ALWAYS 21 1/2")
3. LENGTHS OF HIGHWAY GUARD SHOWN ARE MEASUREMENTS ALONG THE FACE OF THE RAILING.
4. OTHER DETAILS ARE SHOWN ON E 401.5.0 - E 401.10.0
5. FOR DESCRIPTION, MATERIALS AND CONSTRUCTION METHODS SEE STANDARD SPECIFICATIONS.
6. DETAILS SHOWN HERE ALSO APPLY TO THRIE BEAM GUARD RAIL EXCEPT AS OTHERWISE NOTED.

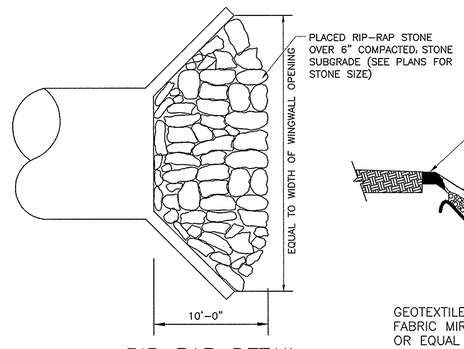

RIP RAP DETAIL

SCALE: NOT TO SCALE

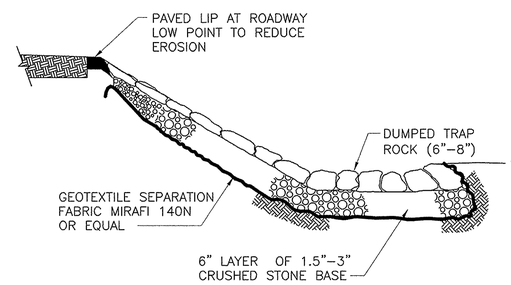

TYPICAL ROADWAY SIDE (SLOPE >2:1)

NOT TO SCALE

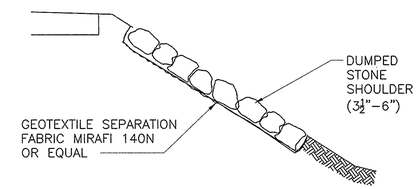

TYPICAL ROADWAY SIDE (SLOPE < 2:1)

NOT TO SCALE

SIDE SLOPE STABILIZATION METHODS (ADJACENT TO ALL WINGWALLS AND AS DIRECTED)

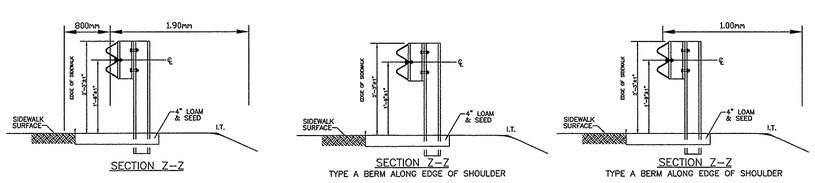

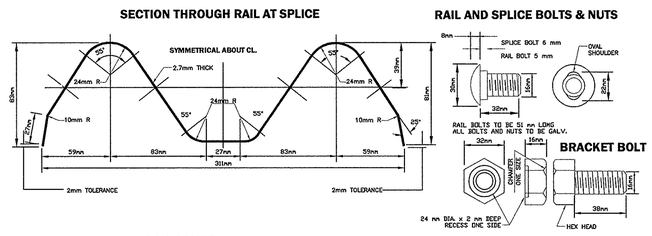

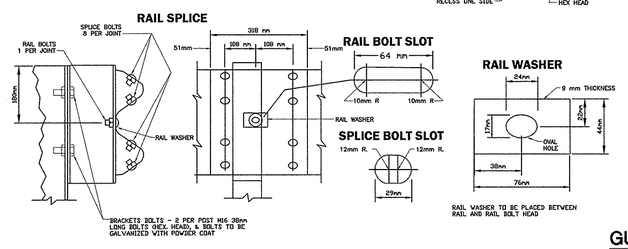

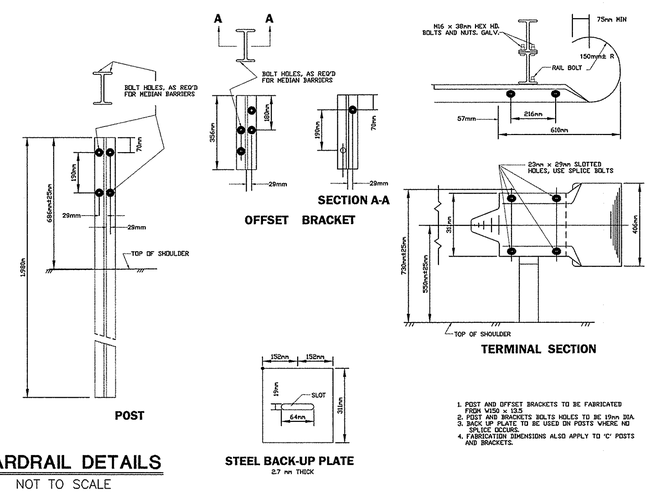

1. POST AND OFFSET BRACKETS TO BE FABRICATED FROM W150 x 13.5
2. POST AND BRACKETS BOLTS HOLES TO BE 19mm DIA.
3. SPLICE PLATE TO BE USED ON POSTS WHERE NO SPLICE OCCURS.
4. FABRICATION DIMENSIONS ALSO APPLY TO 'C' POSTS AND BRACKETS.

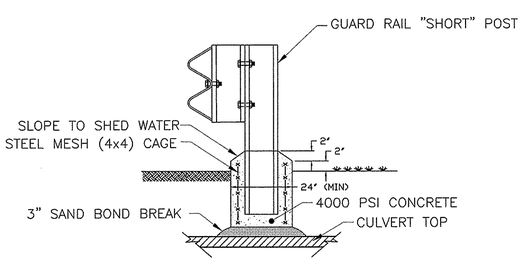

INSTALLATION OVER CULVERT

GUARDRAIL DETAILS

NOT TO SCALE

1. REFER TO MHD CONSTRUCTION STANDARD DETAILS 401.1.0R, 401.7.0 AND 401.8.0 FOR STEEL BEAM HIGHWAY GUARD RAIL, TYPE SS.
2. GUARD RAIL SHALL HAVE BOLT-ON TRAPEZOIDAL WHITE REFLECTORS INSTALLED AT A MAXIMUM SPACING OF 50'.
3. RESET GUARD RAIL SHALL HAVE NEW RED REFLECTORIZED OBJECT MARKERS INSTALLED AT THE BEGINNING OF THE GUARDRAIL AS VEHICLES APPROACH AND A GREEN REFLECTORIZED OBJECT MARKER AT THE TERMINAL END. GUARD RAIL APPROACH END SHALL ALSO HAVE OM-3R OBJECT MARKERS INSTALLED.

© 2015 COUGHLIN ENVIRONMENTAL SERVICES, LLC

REV.	DESCRIPTION	DATE

DRW: AAS DSG: AAS CHK: DJC

CIVIL: DANIEL J. COUGHLIN, III, P.E. CIVIL No. 23364 COMMONWEALTH OF MASSACHUSETTS

TYPICAL CROSS SECTION

CULVERT AND ROADWAY UPGRADE AT CENTRAL ST. (MA RTE 97) OVER PENN BROOK
MASSACHUSETTS EMERGENCY MANAGEMENT AGENCY
HAZARD MITIGATION GRANT PROGRAM
HMGP 1995-35
Prepared For
TOWN OF GEORGETOWN
GEORGETOWN, MASSACHUSETTS

COUGHLIN ENVIRONMENTAL SERVICES, LLC
CONSULTING ENGINEERS AND PLANNERS
62 Montvale Avenue
Stoneham, MA 02180-3637
Phone: (781) 832-1002
Fax: (781) 438-9654
Email: mail@coughlinenvironmental.com

DATE: MAY 2015
Q:\Projects\2510-02\CAD\TYP-XSEC.dwg
CES NO.: 2510-02 | SCALE: AS NOTED

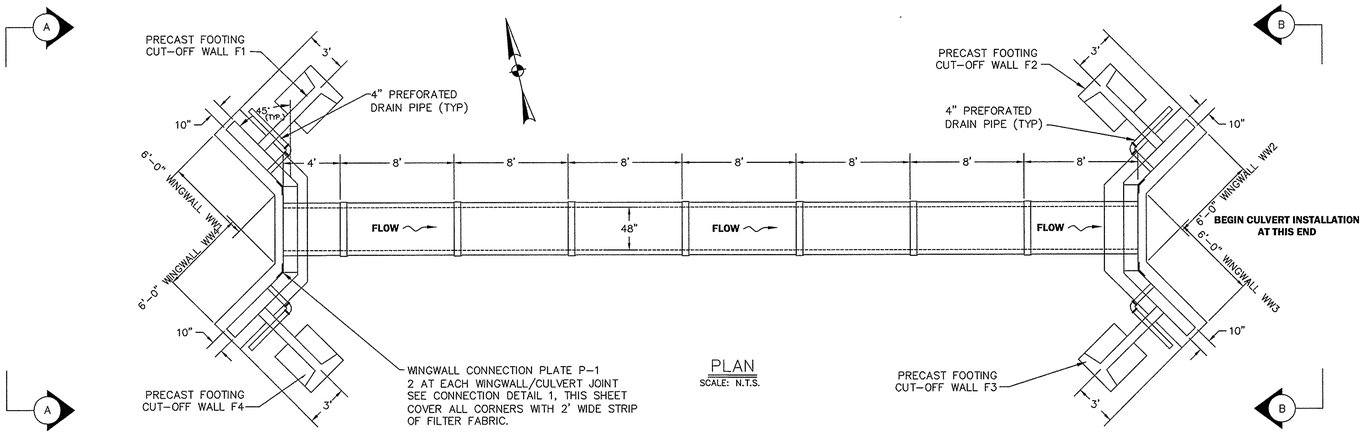

PLAN
SCALE: N.T.S.

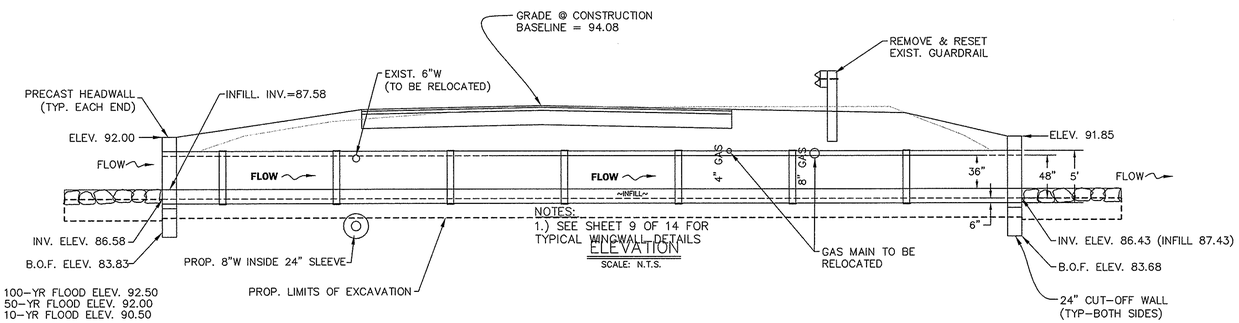

ELEVATION
SCALE: N.T.S.

GENERAL NOTES

1. REFERENCE STANDRADS:
   AASHTO "STANDARD SPECIFICATIONS FOR HIGHWAY BRIDGES"
   ASTM C1433
2. DESIGN PARAMETERS:
   LIVE LOAD: AASHTO HL-93
   EARTH COVER: DESIGN FOR 1.5'
   CONCRETE: DESIGN STRENGTH F'C = 5,000 PSI (MIN.)
   UNIT WEIGHT = 150 PCF
   REINFORCING: ASTM A615 (REBAR), GRADE 60
   ASTM A185 (WWF) FY = 65 KSI
   SOIL: UNIT WEIGHT = 120 PCF
   MINIMUM LATERAL PRESSURE COEFFICIENT .25
   MAXIMUM LATERAL PRESSURE COEFFICIENT .50
   COVER TO REINFORCING: 1 1/2" U.N.O.
3. CLASS V, 48" DIAM. RCP PIPE.
4. ROLL MEMBRANE 48" WIDE, SPEC. FOR ICE & WATER SHIELD.
5. DBS ARE DOWEL BAR SPLICERS AND DI ARE DOWEL INS.
6. PRECAST HEADWALLS NOT DESIGNED FOR IMPACT LOAD.
7. FILL 1" GAPS BETWEEN CULVERTS AND AT ALL PRECAST JOINING AREAS WITH NON-SHRINK GROUT.

WINGWALL NOTES

GENERAL NOTES:

1. THE WINGWALLS HAVE BEEN DESIGNED FOR GENERAL SITE CONDITIONS. THE PROJECT ENGINEER SHALL BE RESPONSIBLE TO ASSESS THE STRUCTURE'S SUITABILITY WITH EXISTING SITE CONDITIONS AND TO ASSESS THE SOILS DURING CONSTRUCTION AND ADJUSTING FOOTINGS, BACKFILL OR CONCRETING RECOMMENDATIONS AS MAY BE APPLICABLE.
2. PRIOR TO FABRICATION, CONTRACTOR MUST VERIFY ALL ELEVATIONS SHOWN WITH SITE CONDITIONS AND CONFIRM WITH THE ENGINEER.

DESIGN DATA

DESIGN METHOD: LOAD FACTOR PER AASHTO SPECIFICATION WINGWALLS DESIGNED FOR EARTH PRESSURE ASSUMED ALLOWABLE SOIL BEARING: 3,000 PSF

WINGWALL ELEVATION TABLE

LOCATION	TOP OF WW @ END	TOP OF WW @ HW
WW1	90.50	91.75
WW2	90.50	91.60
WW3	89.50	91.60
WW4	89.00	91.75

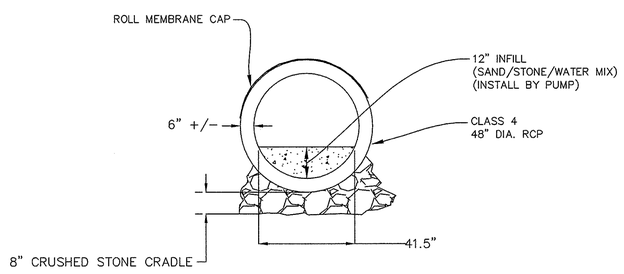

STREAM CROSSING STANDARDS
PIPE CULVERTS 25% INFILL
SCALE: N.T.S.

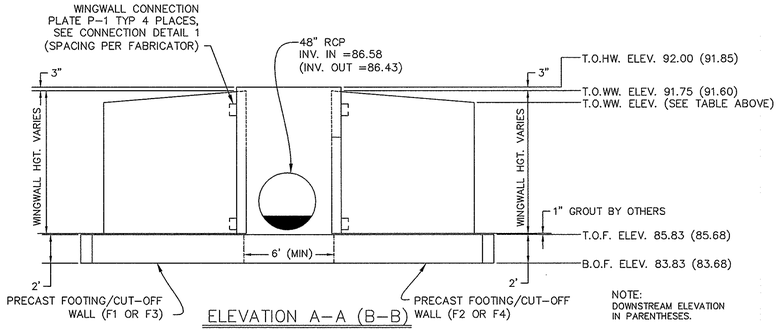

ELEVATION A-A (B-B)
SCALE: N.T.S.

CIVIL:

REV.	DESCRIPTION	DATE

DRW: AAS DSG: AAS CHK: DJC

48" RCP CULVERT LAYOUT AND DETAILS

CULVERT AND ROADWAY UPGRADE AT CENTRAL ST. (MA RTE 97) OVER PENN BROOK
MASSACHUSETTS EMERGENCY MANAGEMENT AGENCY
HAZARD MITIGATION GRANT PROGRAM
HMGP 1895-35
Prepared For
TOWN OF GEORGETOWN
GEORGETOWN, MASSACHUSETTS

COUGHLIN ENVIRONMENTAL SERVICES, LLC
CONSULTING ENGINEERS AND PLANNERS
62 Montvale Avenue
Stoneham, MA 02180-3637
Phone: (781) 832-1002
Fax: (781) 438-9654
Email: mail@coughlinenvironmental.com

DATE: MAY 2015
Q:\Projects\2510-02\CAD\Culvert Details.dwg
CES NO.: 2510-02 SCALE: N.T.S.

© 2015 COUGHLIN ENVIRONMENTAL SERVICES, LLC

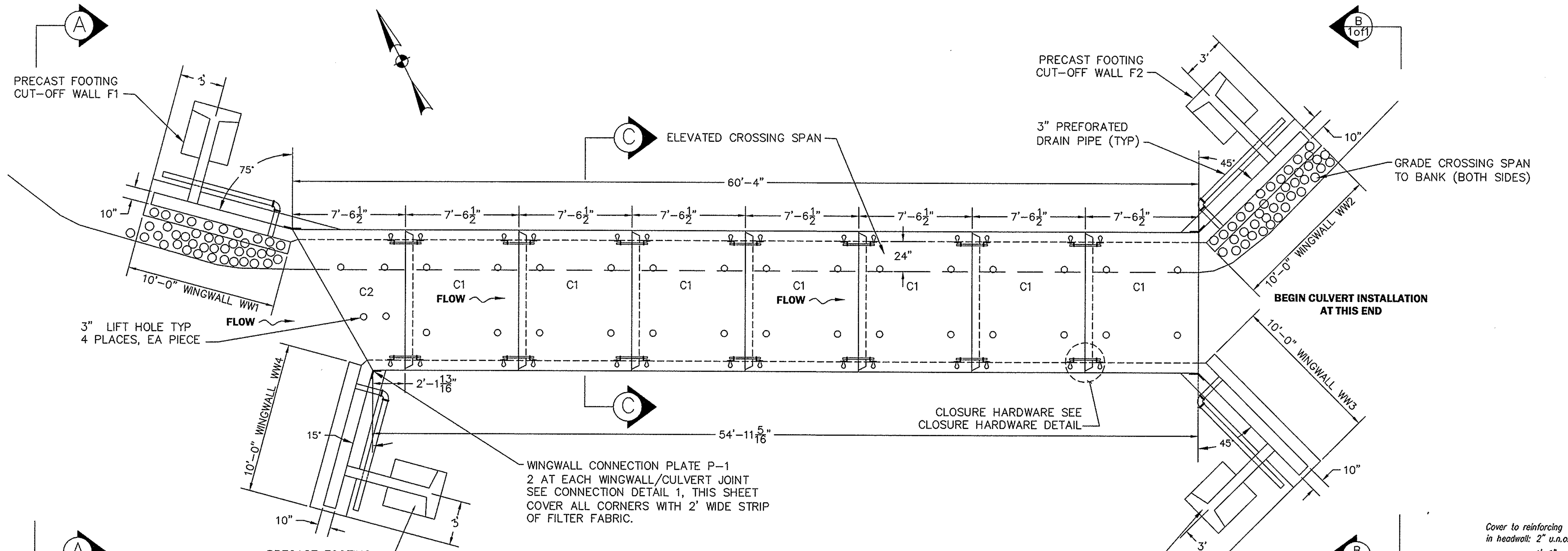

PLAN
SCALE: N.T.S.

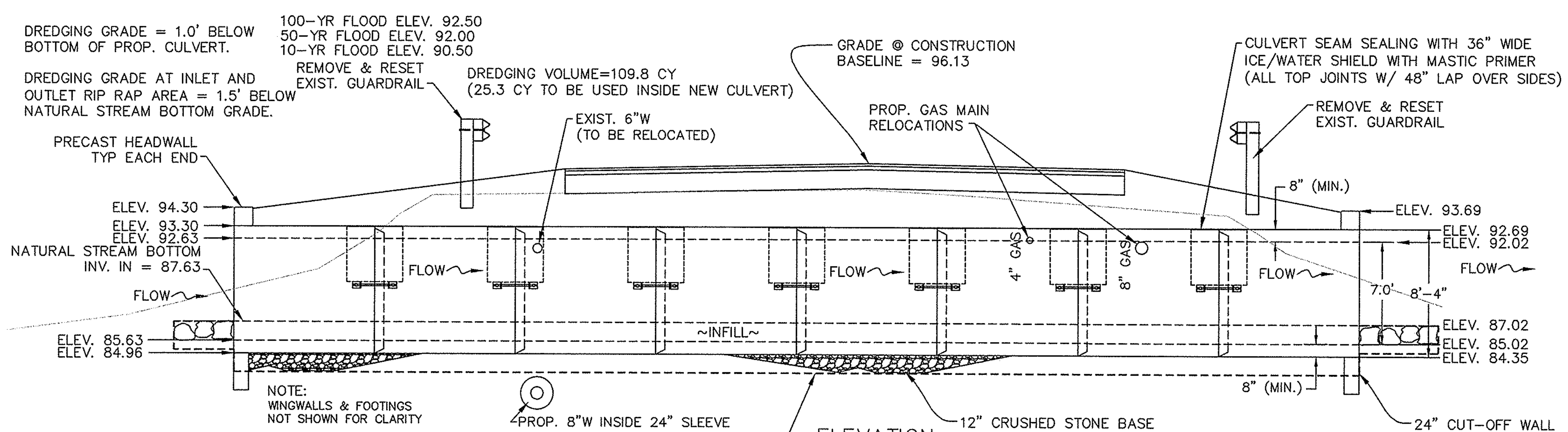

ELEVATION
SCALE: N.T.S.

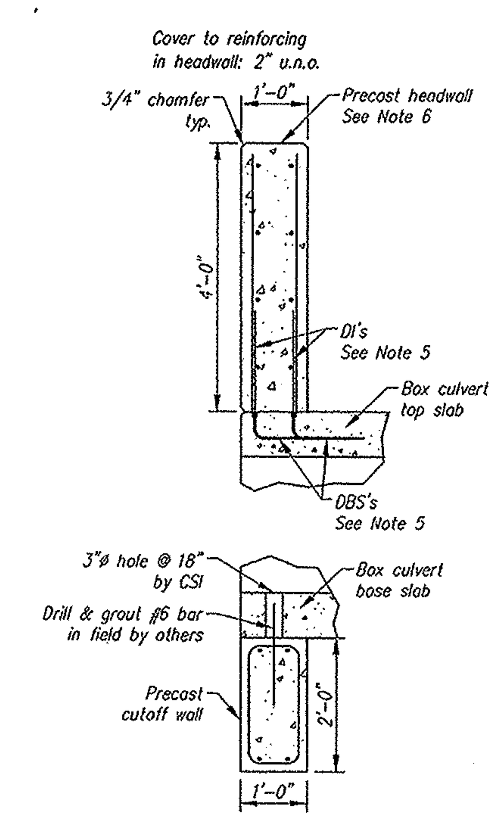

SECTION A

GENERAL NOTES

1. REFERENCE STANDRADS:
   AASHTO "STANDARD SPECIFICATIONS FOR HIGHWAY BRIDGES"
   ASTM C1433
2. DESIGN PARAMETERS:
   LIVE LOAD: AASHTO HL-93
   EARTH COVER: DESIGN FOR 1.5'
   CONCRETE: DESIGN STRENGTH F'C = 5,000 PSI (MIN.)
   UNIT WEIGHT = 150 PCF
   REINFORCING: ASTM A615 (REBAR), GRADE 60
   ASTM A185 (WWF) FY = 65 KSI
   SOIL: UNIT WEIGHT = 120 PCF
   MINIMUM LATERAL PRESSURE COEFFICIENT .25
   MAXIMUM LATERAL PRESSURE COEFFICIENT .50
   COVER TO REINFORCING: 1 1/2" U.N.O.
3. DIMENSIONS INCLUDE A JOINT CAP. ACTUAL CULVERT PIECE LENGTH ½" SHORTER (i.e. C2 = 7'-6").
4. DAMPPROOFING APPLIED TO ROOF AND SIDES.
5. DBS ARE DOWEL BAR SPLICERS AND DI ARE DOWEL INS.
6. PRECAST HEADWALLS NOT DESIGNED FOR IMPACT LOAD.
7. FILL 1" GAP BETWEEN BOX CULVERTS AND AT ALL PRECAST JOINING AREAS WITH NON-SHRINK GROUT.

WINGWALL NOTES

GENERAL NOTES:

1. THE WINGWALLS HAVE BEEN DESIGNED FOR GENERAL SITE CONDITIONS. THE PROJECT ENGINEER SHALL BE RESPONSIBLE TO ASSESS THE STRUCTURE'S SUITABILITY WITH EXISTING SITE CONDITIONS AND TO ASSESS THE SOILS DURING CONSTRUCTION AND ADJUSTING FOOTINGS, BACKFILL OR CONCRETING RECOMMENDATIONS AS MAY BE APPLICABLE.
2. PRIOR TO FABRICATION, CONTRACTOR MUST VERIFY ALL ELEVATIONS SHOWN WITH SITE CONDITIONS AND CONFIRM WITH THE ENGINEER.

DESIGN DATA

DESIGN METHOD: LOAD FACTOR PER AASHTO SPECIFICATION WINGWALLS DESIGNED FOR EARTH PRESSURE ASSUMED ALLOWABLE SOIL BEARING: 3,000 PSF

WINGWALL ELEVATION TABLE

LOCATION	TOP OF WW @ END	TOP OF WW @ HW
WW1	90.50	94.05
WW2	90.50	93.44
WW3	93.50	93.44
WW4	91.00	94.05

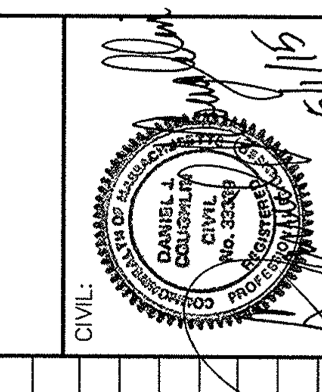

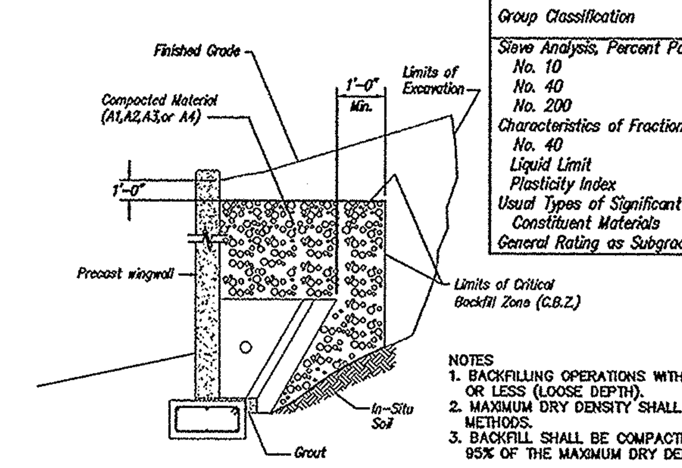

BACKFILL DESCRIPTION

Group Classification	A-1: A-1-a	A-1: A-1-b	A-3	A-2: A-2-4	A-2: A-2-5	A-2: A-2-6	A-2: A-2-7	A-4
Sieve Analysis, Percent Passing								
No. 10	50 max.							
No. 40	30 max.	50 max.	51 min.					
No. 200	15 max.	25 max.	10 max.	35 max.	35 max.	35 max.	35 max.	36 min.
Characteristics of Fraction Passing No. 40								
Liquid Limit				40 max.	41 min.	40 max.	41 min.	40 max.
Plasticity Index	6 max.		N.P.	10 max.	10 max.	11 min.	11 min.	10 max.
Usual Types of Significant Constituent Materials	Stone Fragments, Gravel & Sand		Fine Sand	Silty or Clayey Gravel and Sand				Silty Soils
General Rating as Subgrade	Excellent to Good							Fair to Poor

NOTES
1. BACKFILLING OPERATIONS WITHIN THE C.B.Z. SHALL BE PERFORMED IN LIFTS OF 8" OR LESS (LOOSE DEPTH).
2. MAXIMUM DRY DENSITY SHALL BE DETERMINED BY AASHTO T-99 OR OTHER APPROVED METHODS.
3. BACKFILL SHALL BE COMPACTED IN LAYERS UNTIL THE DENSITY IS NOT LESS THAN 95% OF THE MAXIMUM DRY DENSITY.

WINGWALL BACKFILL REQUIREMENTS

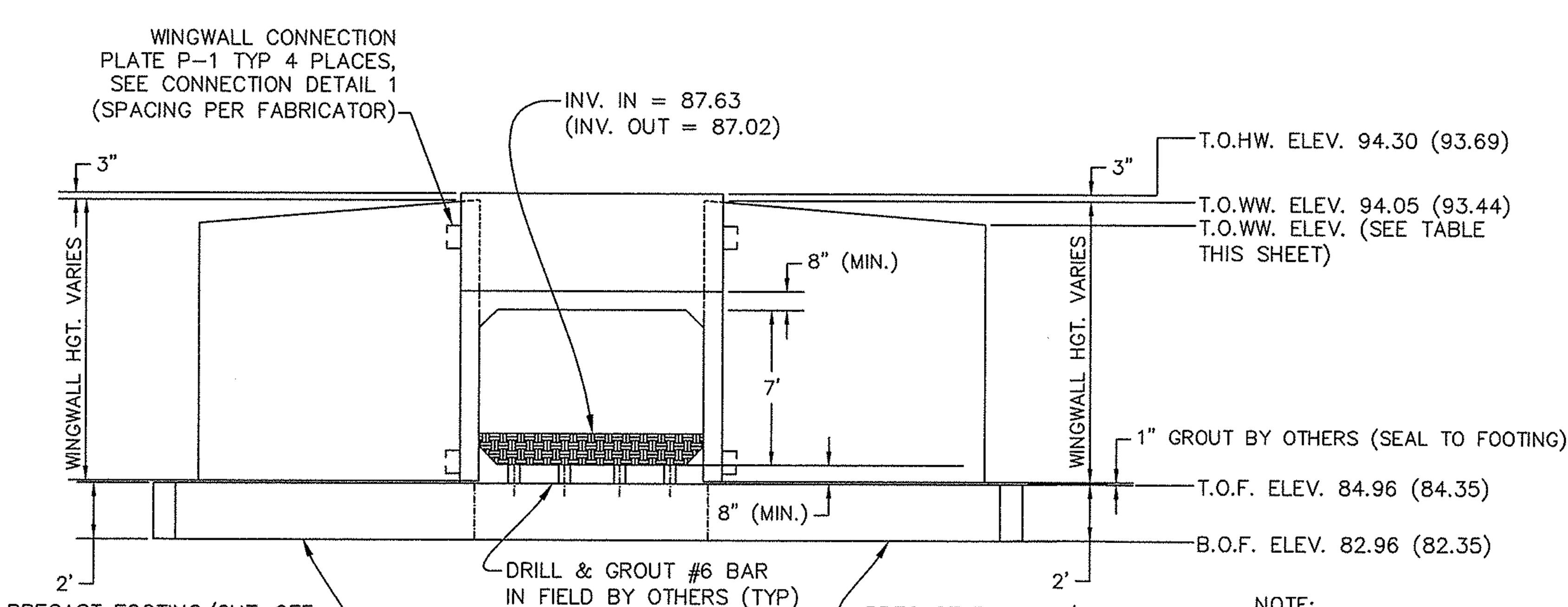

ELEVATION A-A (B-B)
SCALE: N.T.S.

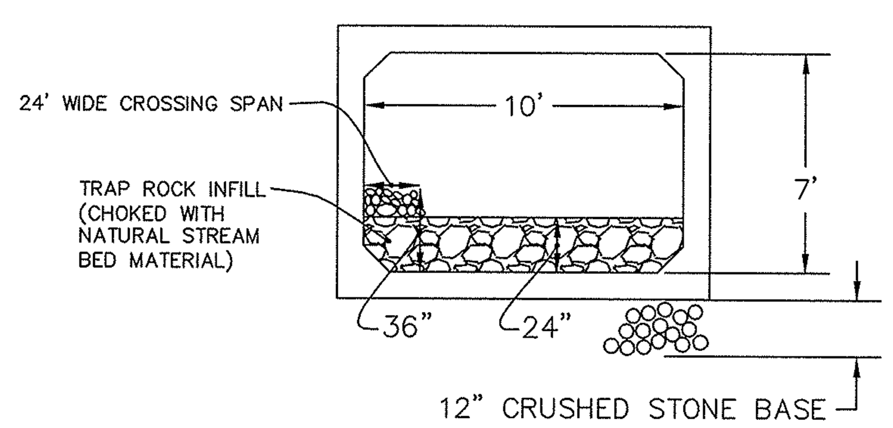

SECTION C-C
SCALE: N.T.S.

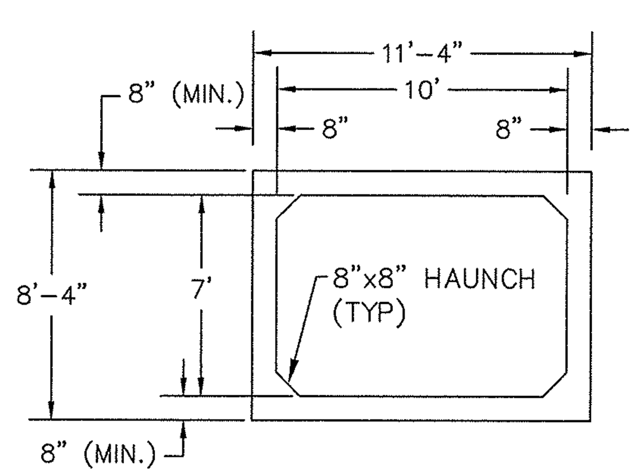

TYP BOX CULVERT SECTION
SCALE: N.T.S.

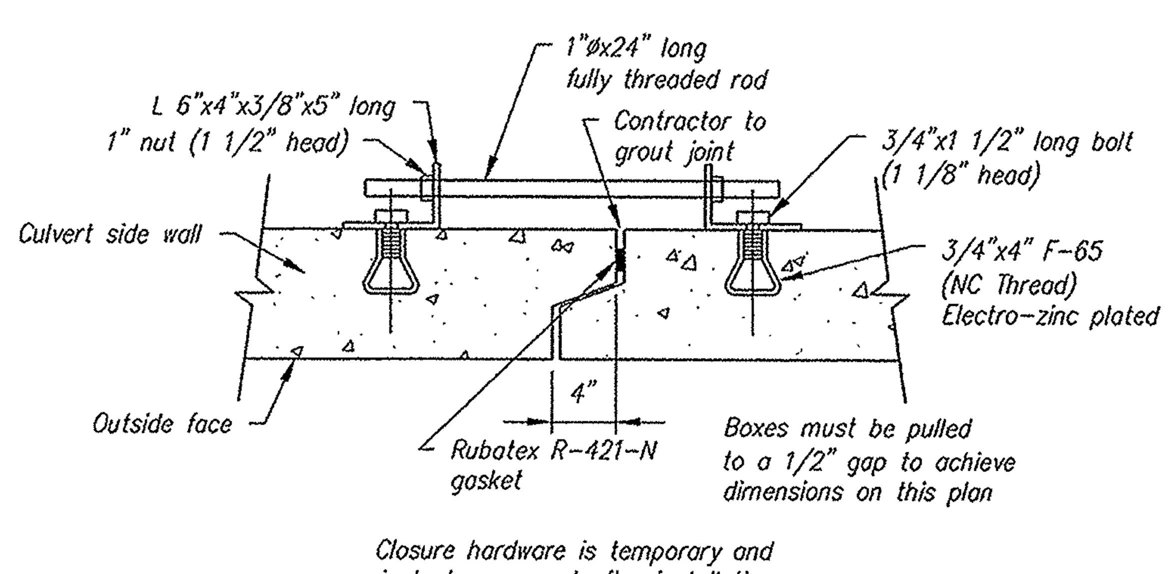

JOINT DETAIL

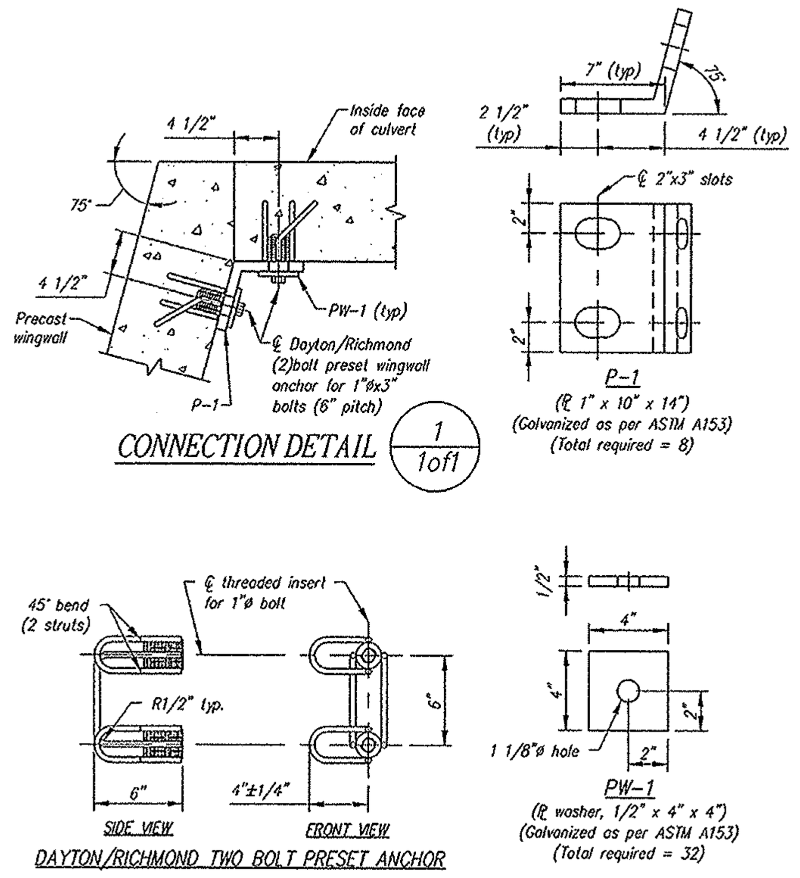

CONNECTION DETAIL 1/1of1

DAYTON/RICHMOND TWO BOLT PRESET ANCHOR

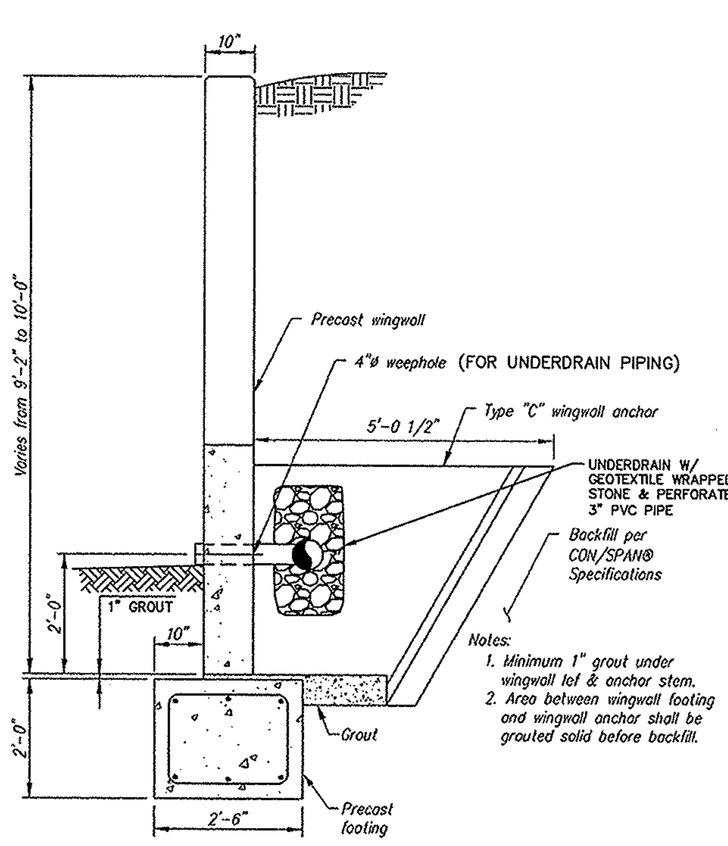

TYPICAL WINGWALL SECTION

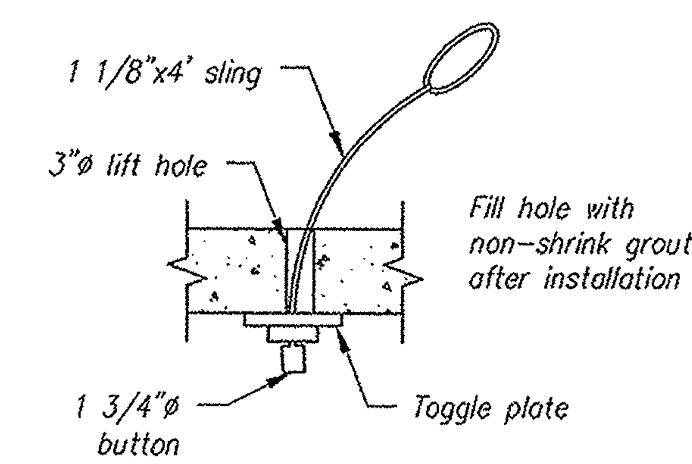

CULVERT LIFTING DETAIL

THE DESIGN ASPECTS AND DETAILS PRESENTED ON THIS PLAN HAVE UTILIZED BASE DRAWING PREPARED BY CONCRETE SYSTEMS INC. (CSI). FINAL SHOP DRAWING MAY VARY SUBJECT TO ENGINEER APPROVAL. THIS PLAN SHEET IS PRESENTED FOR REFERENCE ONLY. CONTRACTOR TO FIELD VERIFY ALL DIMENSIONS AND ELEVATIONS PRIOR TO FABRICATION.

Concrete Systems Inc.
9 Commercial St., Hudson, NH,03051
Phone 603-889-4163
Fax 603-889-2417

DRW: AAS	DSG: AAS	CHK: DJC		DESCRIPTION	REV.	DATE

BOX CULVERT LAYOUT AND DETAILS

CULVERT AND ROADWAY UPGRADE AT CENTRAL ST. (MA RTE 97) OVER PENN BROOK
MASSACHUSETTS EMERGENCY MANAGEMENT AGENCY
HAZARD MITIGATION GRANT PROGRAM
HMGP 1895-35
Prepared For
TOWN OF GEORGETOWN
GEORGETOWN, MASSACHUSETTS

COUGHLIN ENVIRONMENTAL SERVICES, LLC
CONSULTING ENGINEERS AND PLANNERS
62 Montvale Avenue
Stoneham, MA 02180-3637
Phone: (781) 832-1002
Fax: (781) 438-9654
Email: mail@coughlinenvironmental.com

DATE: MAY 2015
Q:\Projects\2510-02\CAD\Culvert Details.dwg
CES NO.: 2510-02 SCALE: N.T.S.

© 2015 COUGHLIN ENVIRONMENTAL SERVICES, LLC

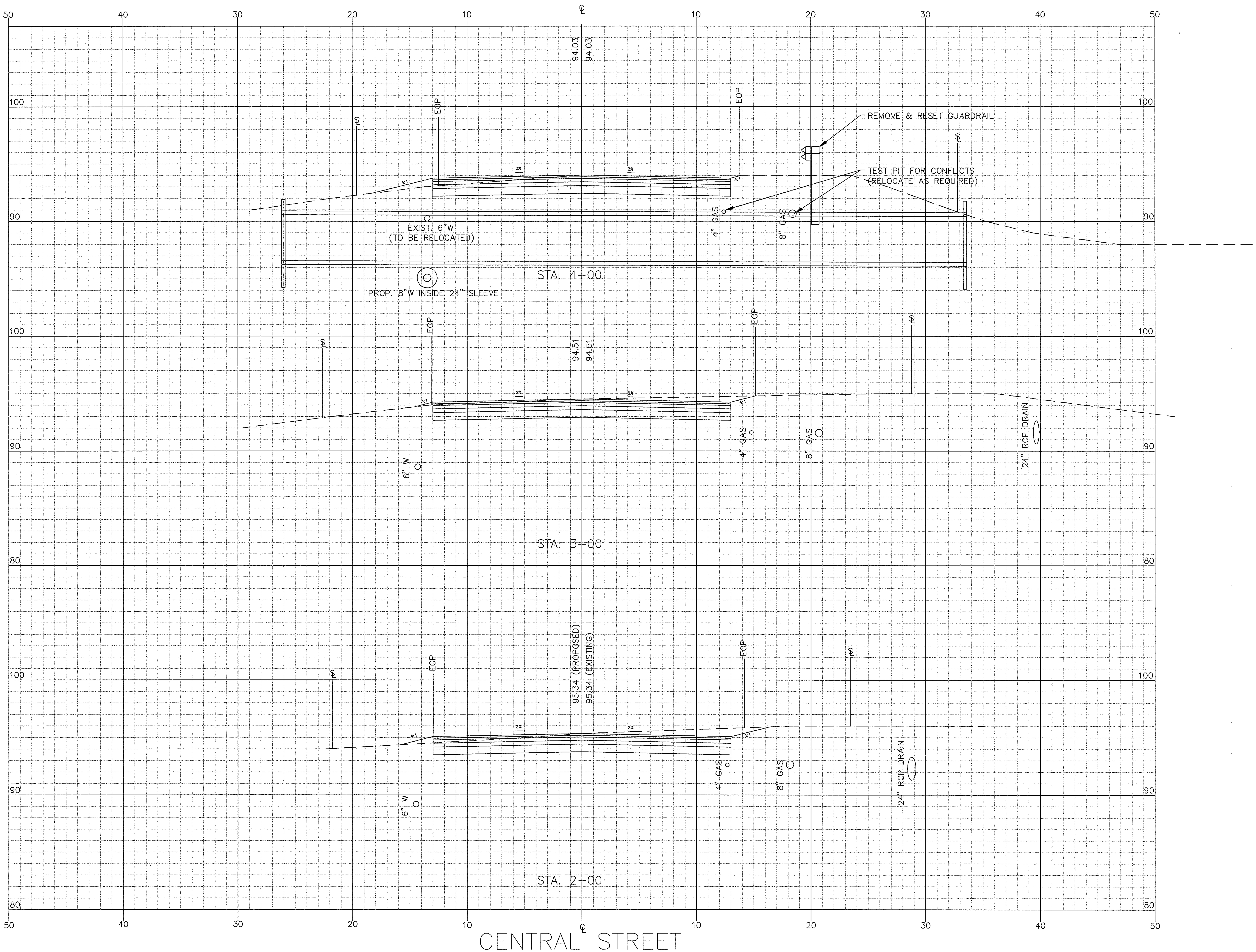

DRW: AAS | DSG: AAS | CHK: DJC

REV.	DESCRIPTION	DATE

CIVIL:

CENTRAL STREET CROSS SECTIONS STA. 2+00 TO STA. 4+00

CULVERT AND ROADWAY UPGRADE AT CENTRAL ST. (MA RTE 97) OVER PENN BROOK
MASSACHUSETTS EMERGENCY MANAGEMENT AGENCY
HAZARD MITIGATION GRANT PROGRAM
HMGP 1895-35

Prepared For

TOWN OF GEORGETOWN
GEORGETOWN, MASSACHUSETTS

COUGHLIN ENVIRONMENTAL SERVICES, LLC

CONSULTING ENGINEERS AND PLANNERS

62 Montvale Avenue
Stoneham, MA 02180-3637
Phone: (781) 832-1002
Fax: (781) 438-9654
Email: mail@coughlinenvironmental.com

DATE: MAY 2015

Q:\Projects\2510-02\CAD\Cross Sections.dwg

CES NO.: 2510-02 | SCALE: 1" = 4'

© 2015 COUGHLIN ENVIRONMENTAL SERVICES, LLC

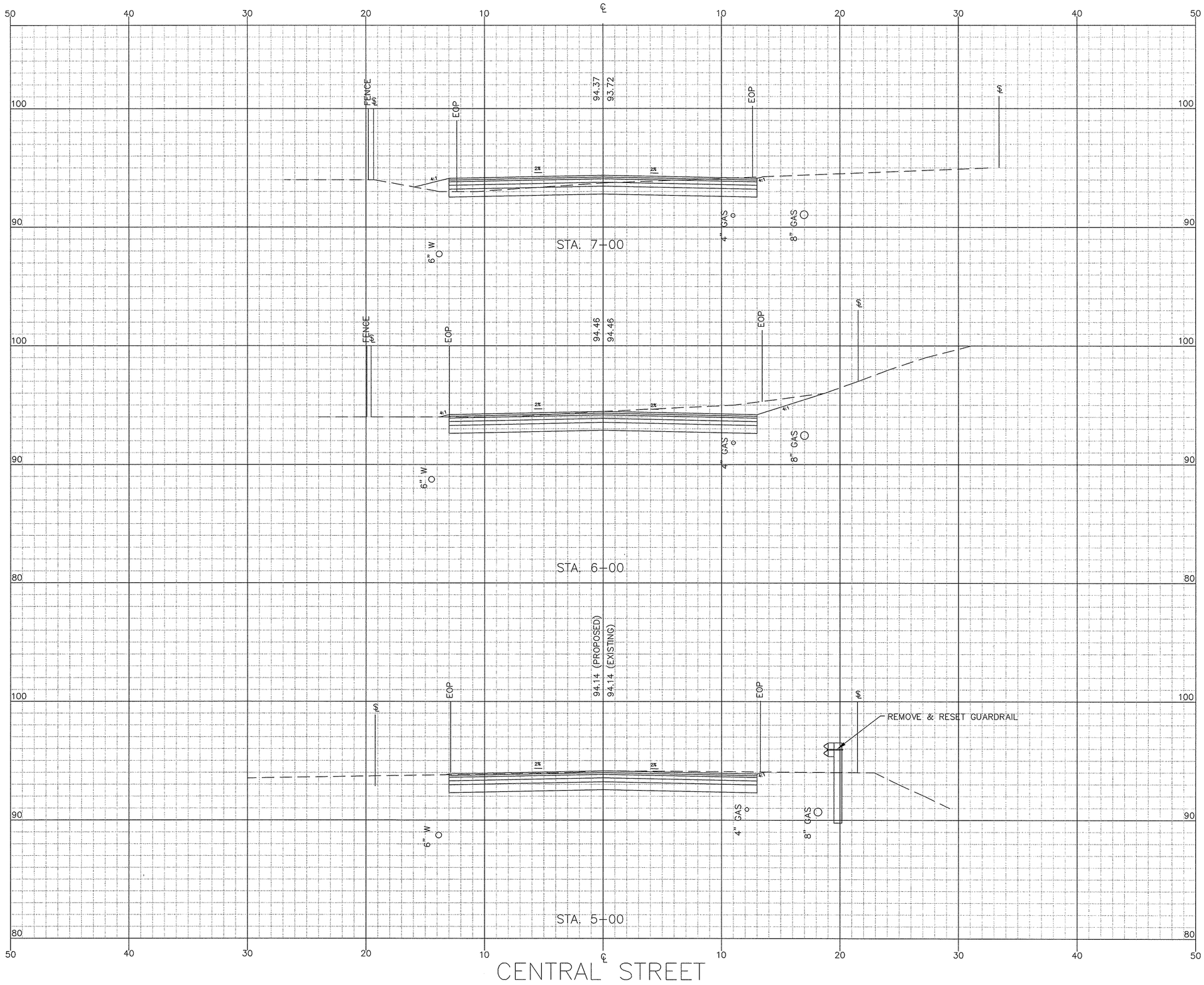

REV.	DESCRIPTION	DATE
1	REVISED PROP. SECTION 7+00	1/16/2014

DRW: AAS DSG: AAS CHK: DJC

CIVIL: DANIEL J. COUGHLIN COMMONWEALTH OF MASSACHUSETTS NO. 37476 REGISTERED PROFESSIONAL ENGINEER

CENTRAL STREET CROSS SECTIONS STA. 5+00 TO STA. 7+00

CULVERT AND ROADWAY UPGRADE AT CENTRAL ST. (MA RTE 97) OVER PENN BROOK

MASSACHUSETTS EMERGENCY MANAGEMENT AGENCY

HAZARD MITIGATION GRANT PROGRAM HMGP 1895-35

Prepared For

TOWN OF GEORGETOWN GEORGETOWN, MASSACHUSETTS

COUGHLIN ENVIRONMENTAL SERVICES, LLC

CONSULTING ENGINEERS AND PLANNERS

62 Montvale Avenue
Stoneham, MA 02180-3637
Phone: (781) 832-1002
Fax: (781) 438-9654
Email: mail@coughlinenvironmental.com

DATE: MAY 2015

Q:\Projects\2510-02\CAD\Cross Sections.dwg

CES NO.: 2510-02 SCALE: 1" = 4'

© 2015 COUGHLIN ENVIRONMENTAL SERVICES, LLC

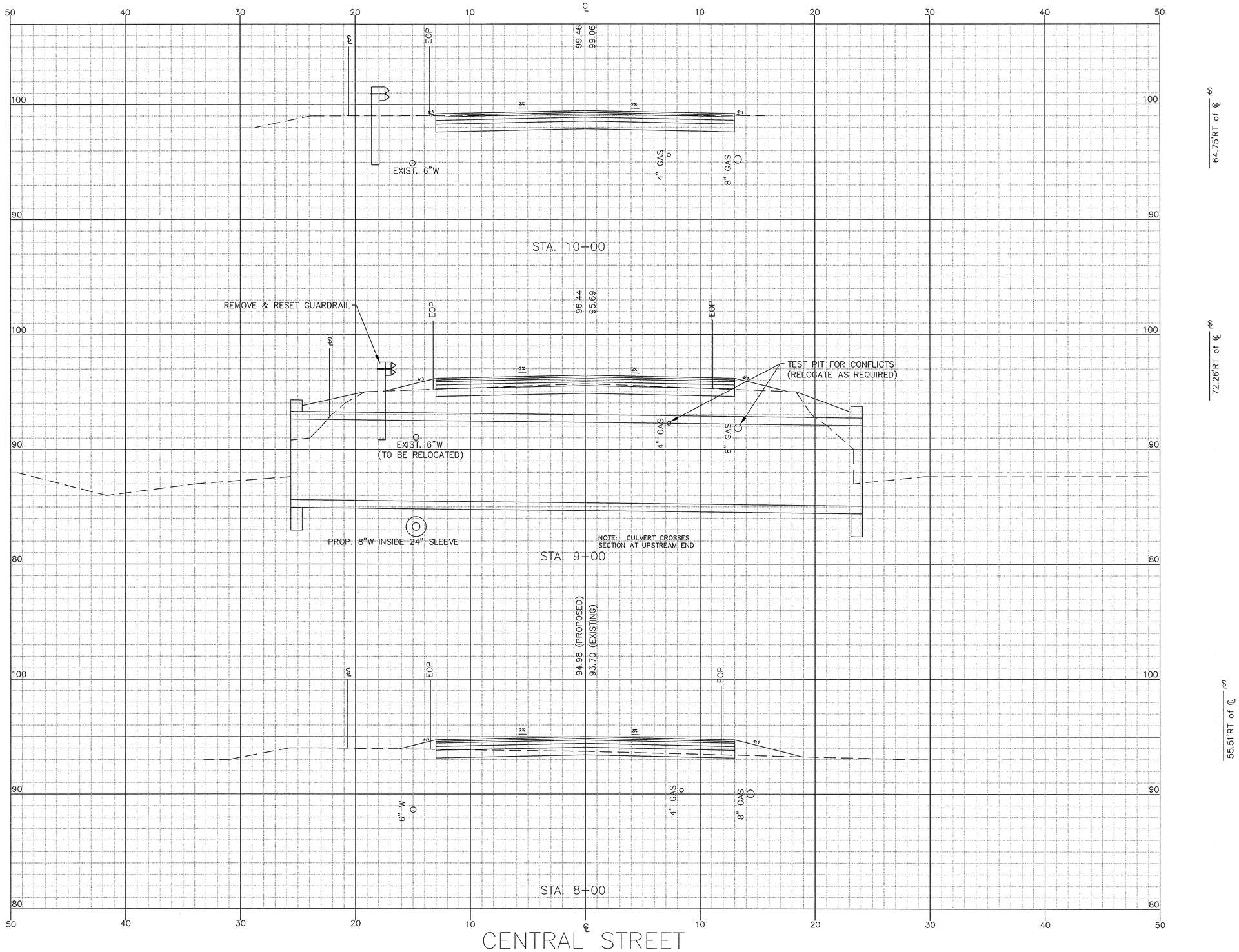

CIVIL:

DANIEL J. COUGHLIN
No. 37179
CIVIL

REV.	DESCRIPTION	DATE
1	REVISED SECTIONS FOR NEW PROFILE	4/16/2014

DRW: AAS DSG: AAS CHK: DJC

CENTRAL STREET
CROSS SECTIONS
STA. 8+00 TO STA. 10+00

CULVERT AND ROADWAY UPGRADE AT CENTRAL ST. (MA RTE 97) OVER PENN BROOK
MASSACHUSETTS EMERGENCY MANAGEMENT AGENCY
HAZARD MITIGATION GRANT PROGRAM
HMGP 1895-35
Prepared For
TOWN OF GEORGETOWN
GEORGETOWN, MASSACHUSETTS

COUGHLIN ENVIRONMENTAL SERVICES, LLC
CONSULTING ENGINEERS AND PLANNERS
62 Montvale Avenue
Stoneham, MA 02180-3637
Phone: (781) 832-1002
Fax: (781) 438-9654
Email: mail@coughlinenvironmental.com

DATE: MAY 2015
O:\Projects\2510-02\CAD\Cross Sections.dwg
CES NO.: 2510-02 SCALE: 1" = 4'

© 2015 COUGHLIN ENVIRONMENTAL SERVICES, LLC

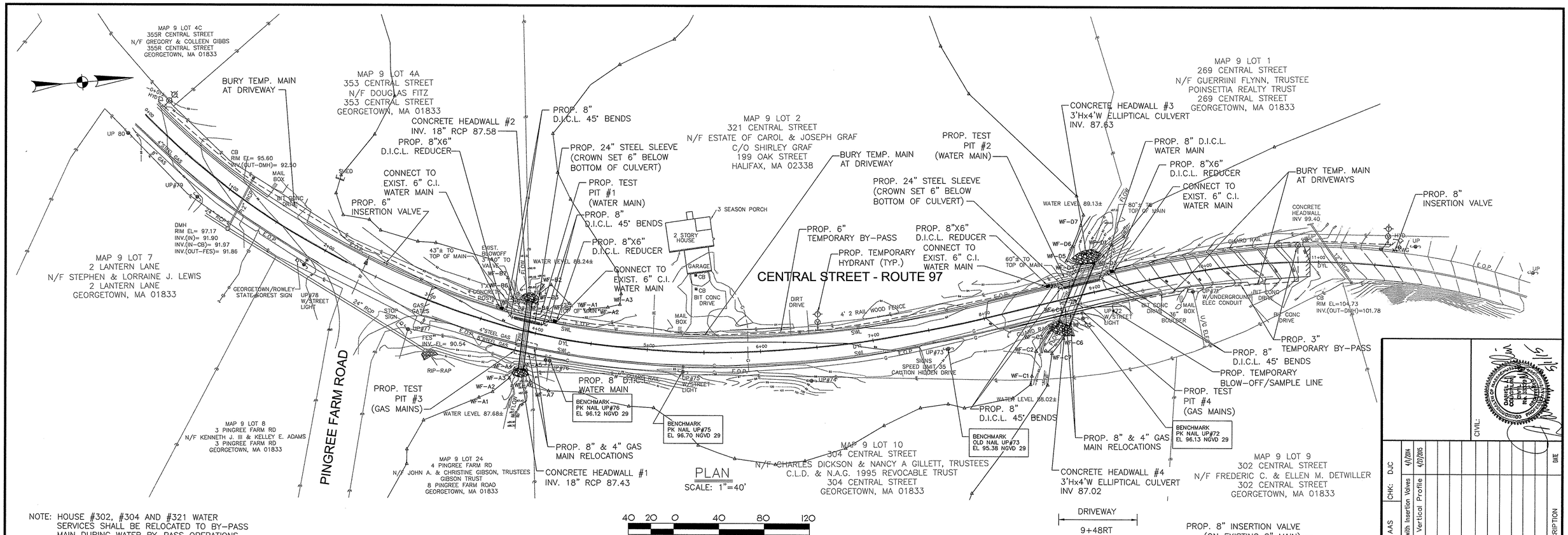

NOTE: HOUSE #302, #304 AND #321 WATER SERVICES SHALL BE RELOCATED TO BY-PASS MAIN DURING WATER BY-PASS OPERATIONS

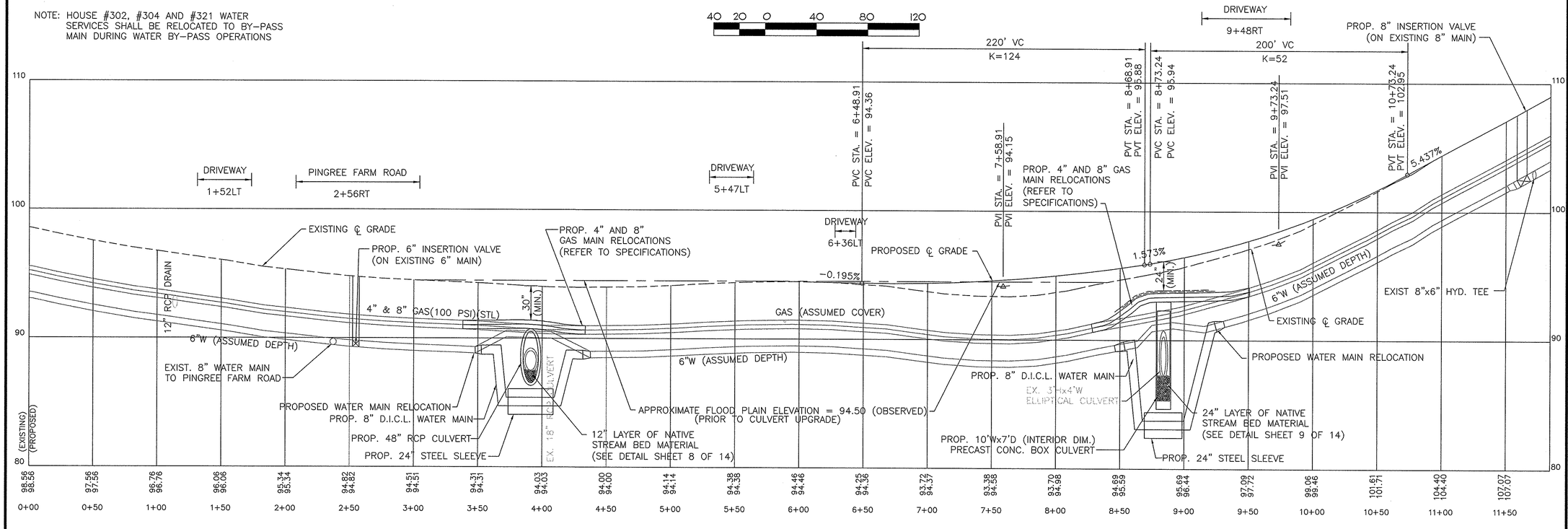

PROFILE
HORIZ. SCALE: 1"=40'
VERT. SCALE: 1"=4'

REV.	DESCRIPTION	DATE
1	Replace Gate Valves with Insertion Valves	4/1/2014
2	Revise Proposed Vertical Profile	4/21/2015

DRW: AAS DSG: AAS CHK: DJC

CIVIL:

UTILITY RELOCATION PLAN

CULVERT AND ROADWAY UPGRADE AT CENTRAL ST. (MA RTE 97) OVER PENN BROOK
MASSACHUSETTS EMERGENCY MANAGEMENT AGENCY
HAZARD MITIGATION GRANT PROGRAM
HMGP 1895-35

Prepared For

TOWN OF GEORGETOWN
GEORGETOWN, MASSACHUSETTS

COUGHLIN ENVIRONMENTAL SERVICES, LLC
CONSULTING ENGINEERS AND PLANNERS
62 Montvale Avenue
Stoneham, MA 02180-3637
Phone: (781) 832-1002
Fax: (781) 438-9654
Email: mail@coughlinenvironmental.com

DATE: MAY 2015
Q:\Projects\2510-02 Central HMGP\base.dwg
CES NO.: 2510-02 SCALE: 1" = 40'

© 2015 COUGHLIN ENVIRONMENTAL SERVICES, LLC

HORIZONTAL BEND FITTINGS				
SIZE	90° BEND	45° BEND	22° BEND	11° BEND
6"	32'	20'	20'	20'
8"	42'	20'	20'	20'
10"	50'	21'	20'	20'
12"	60'	25'	20'	20'

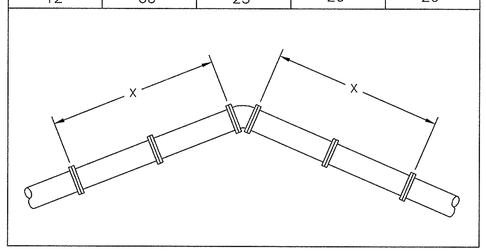

REDUCER FITTINGS	
SIZE	
12" x 10"	51'
12" x 8"	56'
12" x 6"	76'
10" x 8"	30'
10" x 6"	55'
8" x 6"	31'

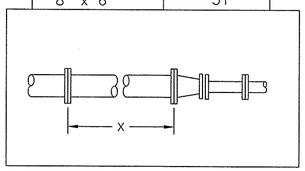

MECHANICAL RESTRAINT TABLES

DISTANCE "X" IS THE MINIMUM LENGTH OF PIPE TO BE RESTRAINED, VERTICAL BENDS TO BE DETERMINED BY THE ENGINEER. THE ENGINEER MAY DIRECT THAT A LONGER LENGTH BE RESTRAINED.

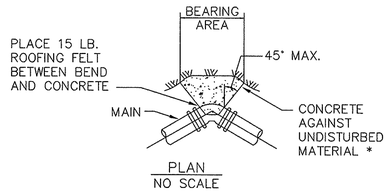

* SEE TABLE ON THRUST BLOCK BEARING FOR THE AREA OF CONCRETE REQUIRED

TYPICAL BEND THRUST BLOCK

N.T.S.

THRUST BLOCK TABLE				
TABLE OF BEARING AREAS IN SQ. FT. AGAINST UNDISTURBED MATERIAL FOR PIPE FITTINGS.				
SIZE OF MAIN (IN.)	90° BEND/ TEE	45° BEND	CAP	EXIST. GATE VALVE
6"	4	2	3	3
8"	6	3	5	5
10"	9	5	7.5	7.5
12"	12	7	10.5	10.5

NOTES:

1. FOR FITTING WITH LESS THAN 45° DEFLECTION USE BEARING AREAS FOR 45° BEND.
2. TABLE OF BEARING AREAS DESIGNED FOR GASKETED PUSH-ON PIPE.
3. CONCRETE FOR THRUST BLOCKS SHALL BE 3000psi
4. PROTECT ALL VALVES, FITTINGS OR HYDRANTS FROM CONTACT WITH CONCRETE WITH 15 LB. ROOFING FELT.

MINIMUM THRUST BLOCK BEARING AREAS FOR PIPE

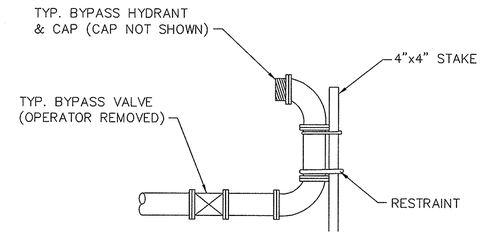

REFER TO BYPASS WATER MAIN SPECIFICATIONS

BYPASS WATER MAIN DETAIL

N.T.S.

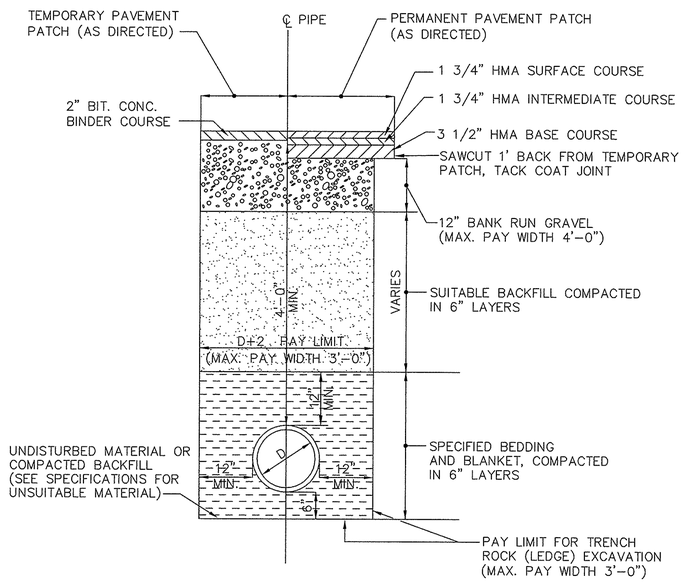

TYPICAL TRENCH DETAIL

N.T.S.

GENERAL WATER NOTES

1. THE CONTRACTOR SHALL FURNISH AND INSTALL TEMPORARY BY-PASS WATER MAINS AND TEMPORARY HOUSE SERVICE CONNECTIONS AS SHOWN ON THE CONTRACT DRAWINGS PRIOR TO COMMENCING REHABILITATION OR REPLACEMENT CONSTRUCTION OF WATER MAINS. THE CONTRACTOR'S ATTENTION IS DIRECTED TO SECTION 33 11 13 OF THE SPECIFICATIONS FOR ADDITIONAL INFORMATION.
2. TEMPORARY BLOW-OFF/SAMPLING LINES SHALL BE REMOVED TO THE CORPORATION STOP OR AS DIRECTED BY THE ENGINEER.
3. CLAY DAMS TO BE INSTALLED ON WATER MAIN ON EITHER SIDE OF THE CULVERT CROSSINGS WITHIN 10 FEET OF CULVERT ON BOTH SIDES OR AS DIRECTED BY THE ENGINEER, AS DESCRIBED IN THE CLAY DAM SECTION OF THE SPECIFICATIONS.
4. BRONZE WEDGES SHALL BE INSTALLED AT ALL GASKETED PIPE JOINTS, 2 MIN. PER JOINT LOCATION.

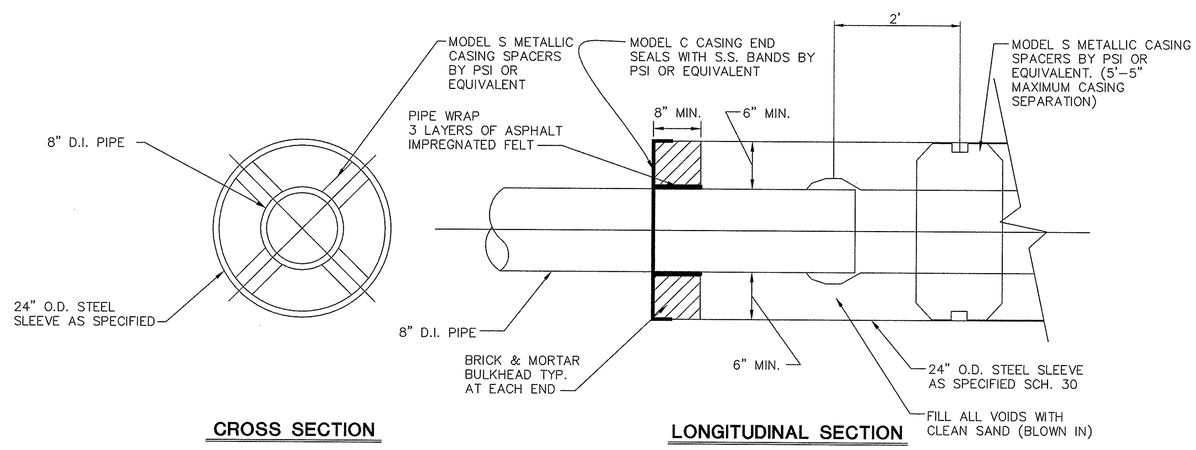

CROSS SECTION

LONGITUDINAL SECTION

WATER SLEEVE DETAILS

N.T.S.

REV.	DESCRIPTION	DATE

DRW: AAS DSG: AAS CHK: DJC

CIVIL: DANIEL J. COUGHLIN COMMONWEALTH OF MASSACHUSETTS NO. 32320 REGISTERED PROFESSIONAL ENGINEER

WATER SYSTEM DETAILS

CULVERT AND ROADWAY UPGRADE AT CENTRAL ST. (MA RTE 97) OVER PENN BROOK

MASSACHUSETTS EMERGENCY MANAGEMENT AGENCY

HAZARD MITIGATION GRANT PROGRAM HMGP 1895-35

Prepared For

TOWN OF GEORGETOWN GEORGETOWN, MASSACHUSETTS

COUGHLIN ENVIRONMENTAL SERVICES, LLC

CONSULTING ENGINEERS AND PLANNERS

62 Montvale Avenue
Stoneham, MA 02180-3637
Phone: (781) 832-1002
Fax: (781) 438-9654
Email: mail@coughlinenvironmental.com

DATE: MAY 2015

Q:\Projects\2510-02 Central HMGP\base.dwg

CES NO.: 2510-02 SCALE: 1" = 40'

© 2015 COUGHLIN ENVIRONMENTAL SERVICES, LLC