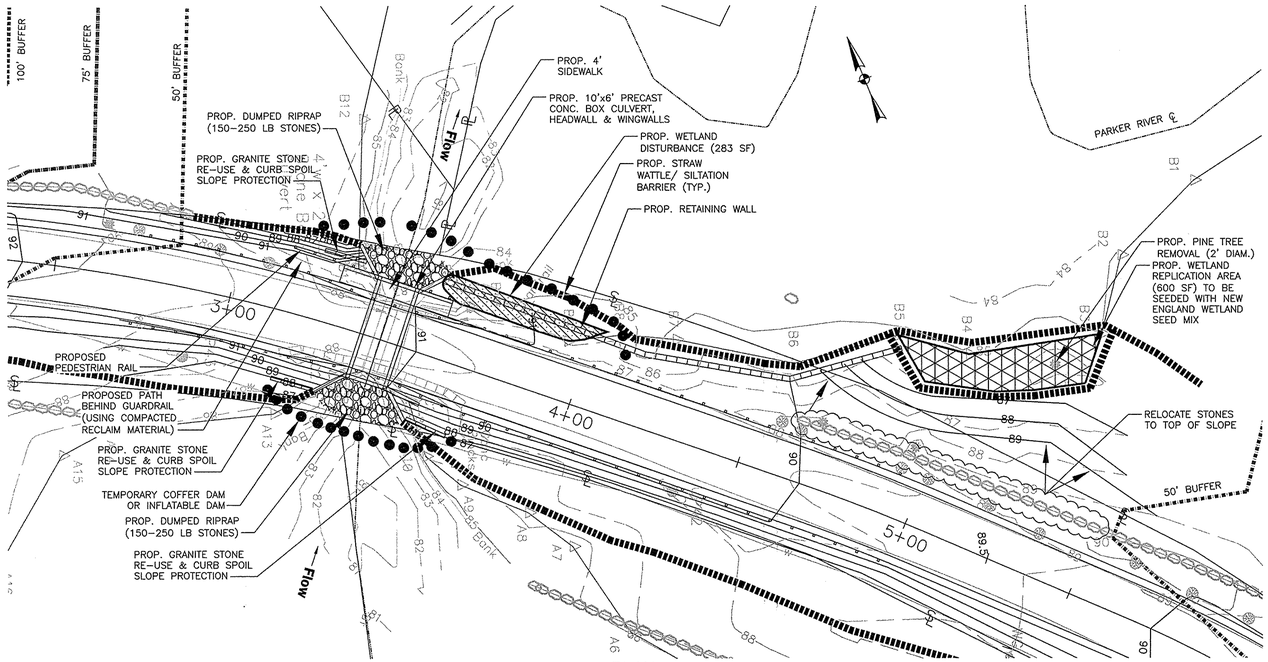

PLAN
SCALE: 1"=20'

LEGEND

- GUARDRAIL LIMITS
- TEMPORARY COFFER DAM OR INFLATABLE DAM
- RETAINING WALL
- REPLICATION AREA
- FILLING AREA
- EROSION CONTROL BARRIER

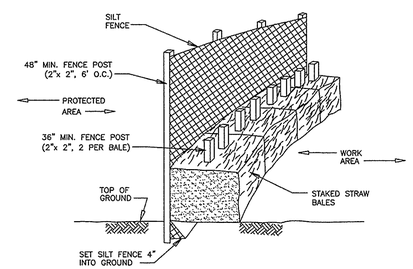

SILTATION BARRIER
NOT TO SCALE

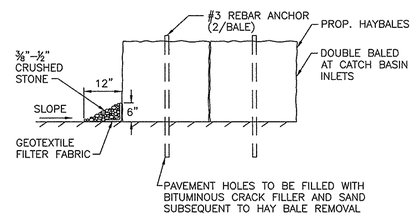

PAVEMENT SILTATION BARRIER
NOT TO SCALE

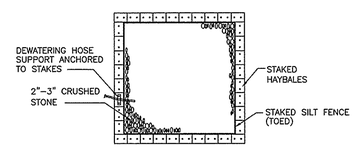

NOTE:
1. BASINS TO BE SIZED TO ALLOW THE MAXIMUM WATER LEVEL IN THE BASIN NOT TO EXCEED ONE HALF THE HEIGHT OF THE HAYBALES DURING OPERATION.
2. DEWATERING BASINS SHALL ONLY BE DIRECTED TO FRESH WATER CHANNELS, STREAM OR STORMWATER DRAINAGE SYSTEMS.

DEWATERING BASIN
NOT TO SCALE

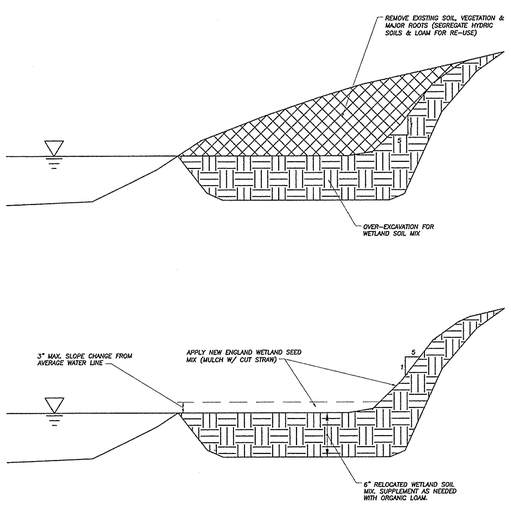

WETLAND REPLICATION DETAIL
NOT TO SCALE

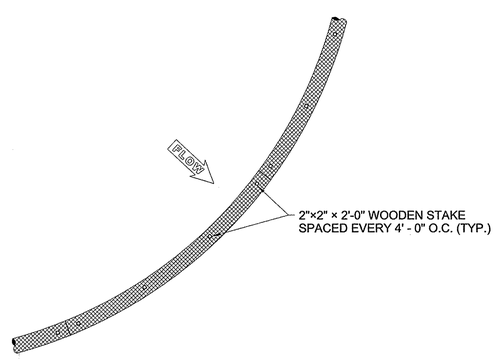

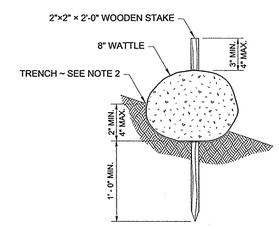

STRAW WATTLE EROSION CONTROL DETAILS
N.T.S.

NOTES:
1. THE OVERALL OBJECTIVE OF THIS PLAN IS THE CREATION OF 600 SQUARE FEET OF BORDERING VEGETATED WETLAND TO MITIGATE THE TOTAL ALTERATION OF 283 S.F. OF BORDERING WETLAND FOR ROADWAY RETENTION WALL.

2. CONSTRUCTION OF THE MITIGATION AREAS SHALL BE DONE UNDER THE GUIDANCE OF THE PROJECT ENGINEER. THE PROJECT ENGINEER SHALL BE ON SITE MARKING LARGE TREES FOR PROTECTION AND PRESERVATION, AND CHECKING GRADES AND HYDROLOGY DURING EXCAVATION OF THE MITIGATION AREA.

3. MITIGATION AREA GOALS
   A. AT A MINIMUM, 75% COVER WITH EXISTING AND/OR NATIVE WETLAND SPECIES WITHIN TWO YEARS OF RESTORATION.
   B. LONG TERM: FULL VEGETATED WETLAND ABUTTING RIVER.

4. PRIOR TO CONSTRUCTION WITHIN 100' OF THE WETLANDS, SILT FENCE AND HAY BALES WILL BE INSTALLED AT THE LIMIT OR WORK, INCLUDING ALONG THE FLAGGED WETLAND BOUNDARY ADJACENT TO THE PROJECT AREA.

5. EXISTING TREES (AND STUMPS) TO REMAIN IN REPLICATION AREAS SHALL BE PRESERVED TO PROMOTE RE-GROWTH.

6. SELECTIVE CUTTING OR REMOVAL OF INVASIVE SPECIES MAY ALSO BE AUTHORIZED BY THE PROJECT ENGINEER TO ENHANCE WETLAND VALUE AND PROMOTE RE-GROWTH OF NATIVE SPECIES.

7. THE MITIGATION AREAS SHALL BE EXCAVATED TO THE LEVEL OF ABOUT 6" BELOW FINISH GRADE OR TO ON EXISTING ORGANIC SUBSTRATE, THE SUB-GRADE IS TO BE CHECKED BY THE PROJECT ENGINEER TO ENSURE PROPER HYDROLOGY HAS BEEN ACHIEVED, AND THEN FILLED WITH PREVIOUSLY STOCKPILED WETLAND SOILS OR SELECTED SOIL WITH HIGH ORGANIC CONTENT (PER ACOE NEW ENGLAND DISTRICT MITIGATION GUIDELINES). IF SIGNIFICANTLY COMPACTED BY EQUIPMENT, THIS SOIL MUST BE ROTOTILLED TO ACHIEVE FRIABLE CONSISTENCE. IF EXISTING WETLAND SOILS ARE AVAILABLE AT THE SITE, RE-USE WILL BE A PRIORITY.

8. IMMEDIATELY AFTER WETLAND SOIL PLACEMENT AND GRADING, THE AREA SHALL BE OVER-SPRAYED WITH A NEW ENGLAND WETMIX SEED.

9. THE EROSION CONTROL BARRIER BETWEEN THE WETLANDS AND MITIGATION AREAS SHALL BE REMOVED UPON STABILIZATION OF THE MITIGATION AREAS AND THE AREA RAKED TO ELIMINATE ANY BERM THAT MAY BE PRESENT BETWEEN THE WETLAND MITIGATION AREAS AND THE ADJACENT BVW. THE FOOTPRINT OF THIS AREA SHALL BE SEEDED WITH NEW ENGLAND WETMIX SPECIFIED BELOW. ALL STAKES AND TWINE SHALL BE REMOVED.

NEW ENGLAND WETMIX

SPECIES	PERCENT (RAW SEED)
Fox Sedge (Carex vulpinoidea)	40
Hop Sedge (Carex lupulina)	6
Water Plantain (Alisma plantago-aquatica)	5
Nodding Bur Marigold (Bidens cernua)	5
Lurid Sedge (Carex lurida)	5
Soft Rush (Juncus effusus)	5
Grass-leaved Goldenrod (Solidago graminifolia)	5
Bearded Sedge (Carex comosa)	4
Fringed Sedge (Carex crinita)	4
Boneset (Eupatorium perfoliatum)	4
Flat-top Aster (Aster umbellatus)	3
Hard-stem Bulrush (Scirpus acutus)	3
Green Bulrush (Scirpus atrovirens)	3
Woolgrass (Scirpus cyperinus)	3
Spotted Joe Pye weed (Eupatorium maculatum)	2
Blue Vervain (Verbena hastata)	2
Ditch Stonecrop (Penthorum sedoides)	1
TOTAL	100

10. TEN (10) POUNDS OF UPLAND SEED MIX SHALL BE PROVIDED TO THE GEORGETOWN HIGHWAY DEPARTMENT FOR OVERSEEDING SHOULDER AREAS. (SEE SPECIFICATION SECTION 31 25 00)

CIVIL: DONALD A. CAMPBELL JR. CIVIL No. 33259 COMMONWEALTH OF MASSACHUSETTS 11/29/12

DRW: AAS	DSG: AAS	CHK: DJC

REV.	DESCRIPTION	DATE
1	REV. GRADING, ADD HANDRAIL & NOTE 10.	11/29/12

PROPOSED CULVERT UPGRADES & WETLAND REPLICATION

CULVERT AND ROADWAY UPGRADE AT WEST STREET OVER THE PARKER RIVER
MASSACHUSETTS EMERGENCY MANAGEMENT AGENCY
HAZARD MITIGATION GRANT PROGRAM
HMGP-1813-19
Prepared For
TOWN OF GEORGETOWN
GEORGETOWN, MASSACHUSETTS

COUGHLIN ENVIRONMENTAL SERVICES, LLC
CONSULTING ENGINEERS AND PLANNERS
62 Montvale Avenue
Stoneham, MA 02180-3637
Phone: (781) 832-1002
Fax: (781) 438-9654
Email: mail@coughlinenvironmental.com

DATE: JUNE 2012
Q:\Projects\2510-10 West HMGP Georgetown\CAD\base.dwg
CES NO.: 2510-01 SCALE: 1"=20'

© 2012 COUGHLIN ENVIRONMENTAL SERVICES, LLC

Q:\Projects\2510-01 West St HMGP Georgetown\CAD\base.dwg, SHT-6 Prop Culvert Upgrade, 11/29/2012 3:14:31 PM

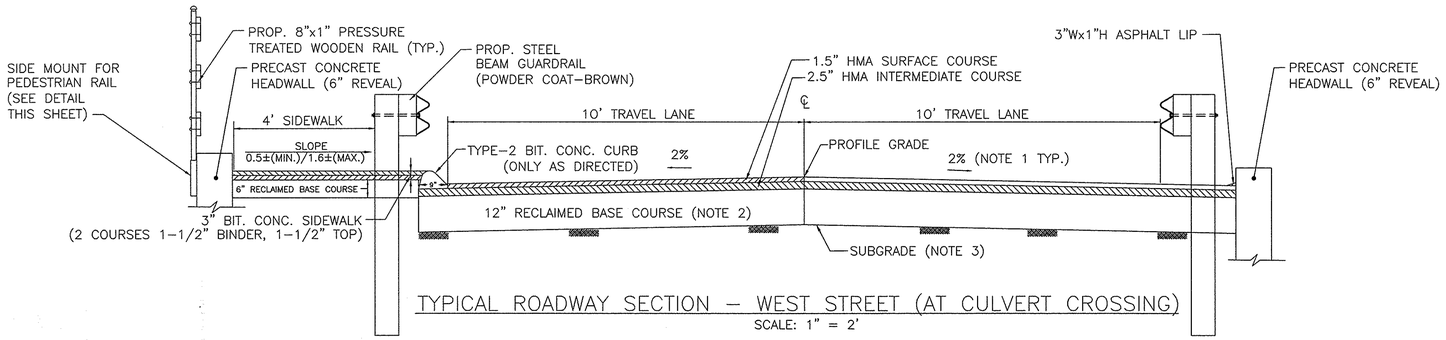

TYPICAL ROADWAY SECTION – WEST STREET (AT CULVERT CROSSING)

SCALE: 1" = 2'

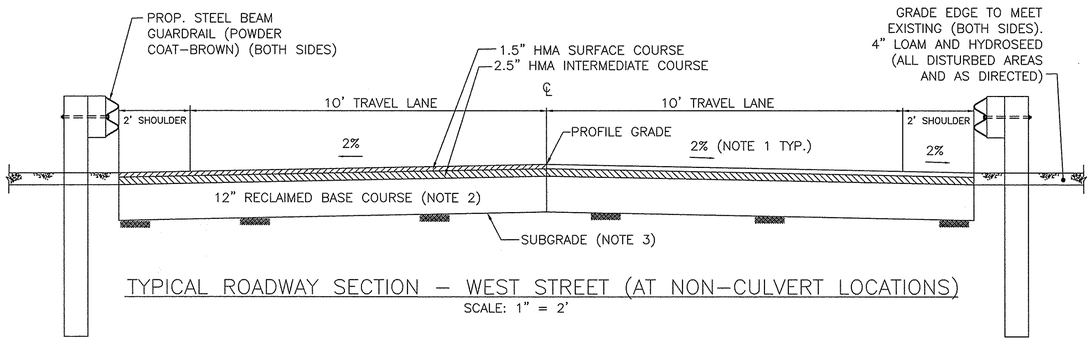

TYPICAL ROADWAY SECTION – WEST STREET (AT NON-CULVERT LOCATIONS)

SCALE: 1" = 2'

PAVEMENT DESIGN (TYP.)

PAVEMENT
1.5" HMA SURFACE COURSE
2.5" HMA INTERMEDIATE COURSE

SUB-BASE
12" GRAVEL OR RECLAIMED BASE COURSE

PAVEMENT NOTES

1. NORMAL CROSS SLOPE IS 2% BUT MAY VARY AS DEFINED ON THE PLANS.
2. WHERE THERE IS INSUFFICIENT RECLAIMED PAVEMENT, PROVIDE GRAVEL BORROW (TYPE b) TO BE BLENDED WITH THE PULVERIZED MATERIAL IN QUANTITIES TO PRODUCE A UNIFORM BLEND SUITABLE FOR USE AS BASE COURSE (MIX IN PLACE).
3. UNSUITABLE MATERIAL IN THE SUBGRADE SHALL BE REMOVED TO THE LINES AND DEPTHS ESTABLISHED BY THE ENGINEER AND REPLACED WITH GRAVEL BORROW OR RECLAIMED BASE COURSE.
4. GUARDRAIL LOCATIONS DEPICTED ON PLAN.

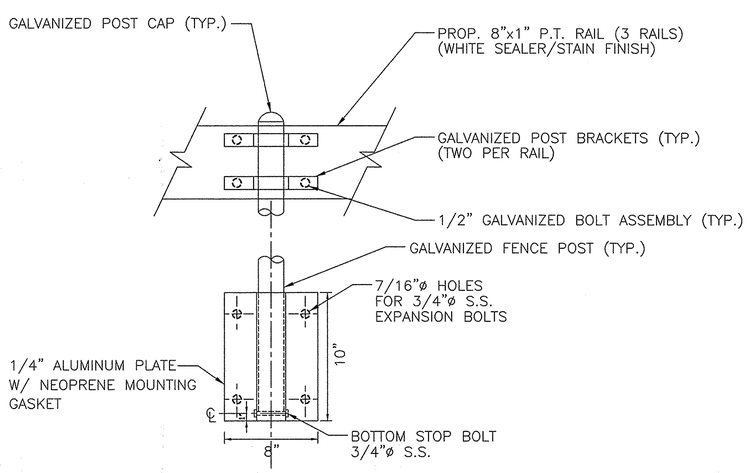

SIDE MOUNT DETAIL

N.T.S.

PEDESTRIAN RAIL

NOTE: BEYOND CULVERT HEADWALL, POLES SHALL BE SET ALONG TOP OF SLOPE IN 4' DEEP x 12" DIAMETER POURED CONCRETE FOUNDATIONS.

CIVIL: DANIEL J. COUGHLIN CIVIL No. 33339 COMMONWEALTH OF MASSACHUSETTS REGISTERED PROFESSIONAL ENGINEER 11/26/12

REV.	DESCRIPTION	DATE
1	ADD NOTES TO PEDESTRIAN RAIL DETAIL	11/26/2012

DRW: AAS DSG: AAS CHK: DJC

TYPICAL CROSS SECTIONS

CULVERT AND ROADWAY UPGRADE AT WEST STREET OVER THE PARKER RIVER
MASSACHUSETTS EMERGENCY MANAGEMENT AGENCY
HAZARD MITIGATION GRANT PROGRAM
HMGP-1813-19
Prepared For
TOWN OF GEORGETOWN
GEORGETOWN, MASSACHUSETTS

COUGHLIN ENVIRONMENTAL SERVICES, LLC
CONSULTING ENGINEERS AND PLANNERS
62 Montvale Avenue
Stoneham, MA 02180-3637
Phone: (781) 832-1002
Fax: (781) 438-9654
Email: mail@coughlinenvironmental.com

DATE: JUNE 2012
Q:\Projects\2510-10 West HMGP Georgetown\CAD\TYP-XSEC.dwg
CES NO.: 2510-01 SCALE: AS NOTED

© 2012 COUGHLIN ENVIRONMENTAL SERVICES, LLC

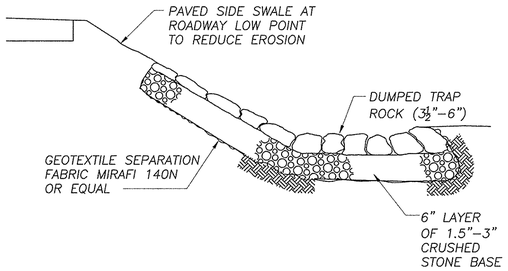

TYPICAL ROADWAY SIDE (SLOPE >2:1)

NOT TO SCALE

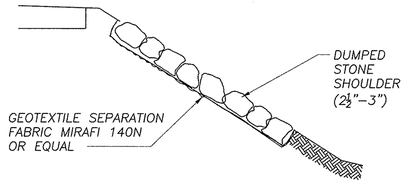

TYPICAL ROADWAY SIDE (SLOPE < 2:1)

NOT TO SCALE

SIDE SLOPE STABILIZATION METHODS (AS DIRECTED)

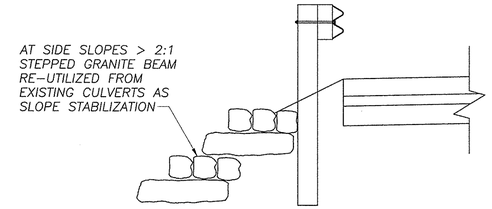

GRANITE STONE RE-USE & SLOPE STABILIZATION DETAIL (TYPICALLY AT END OF CULVERT WINGWALLS (AS DIRECTED))

NOT TO SCALE

NOTE: ALL CULVERT STONE TO BE RE–USED ON–SITE FOR EXPOSED SLOPE STABILIZATION

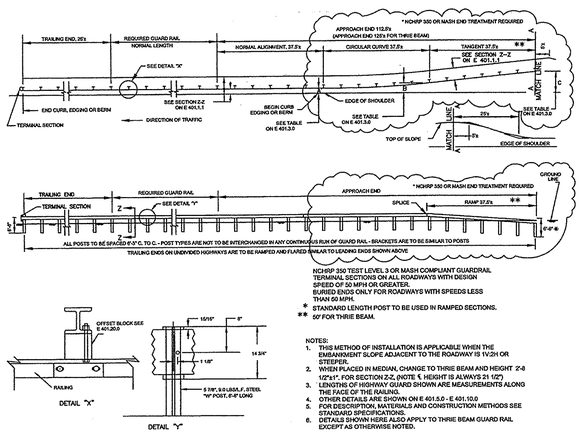

NCHRP 350 TEST LEVEL 3 OR MASH COMPLIANT GUARDRAIL TERMINAL SECTIONS ON ALL ROADWAYS WITH DESIGN SPEED OF 50 MPH OR GREATER.
BURIED ENDS ONLY FOR ROADWAYS WITH SPEEDS LESS THAN 50 MPH.
* STANDARD LENGTH POST TO BE USED IN RAMPED SECTIONS.
** 50' FOR THRIE BEAM.

NOTES:
1. THIS METHOD OF INSTALLATION IS APPLICABLE WHEN THE EMBANKMENT SLOPE ADJACENT TO THE ROADWAY IS 1V:2H OR STEEPER.
2. WHEN PLACED IN MEDIAN, CHANGE TO THRIE BEAM AND HEIGHT 2'-8 1/2"±1". FOR SECTION Z-Z, (NOTE ℄ HEIGHT IS ALWAYS 21 1/2")
3. LENGTHS OF HIGHWAY GUARD SHOWN ARE MEASUREMENTS ALONG THE FACE OF THE RAILING.
4. OTHER DETAILS ARE SHOWN ON E 401.5.0 - E 401.10.0
5. FOR DESCRIPTION, MATERIALS AND CONSTRUCTION METHODS SEE STANDARD SPECIFICATIONS.
6. DETAILS SHOWN HERE ALSO APPLY TO THRIE BEAM GUARD RAIL EXCEPT AS OTHERWISE NOTED.

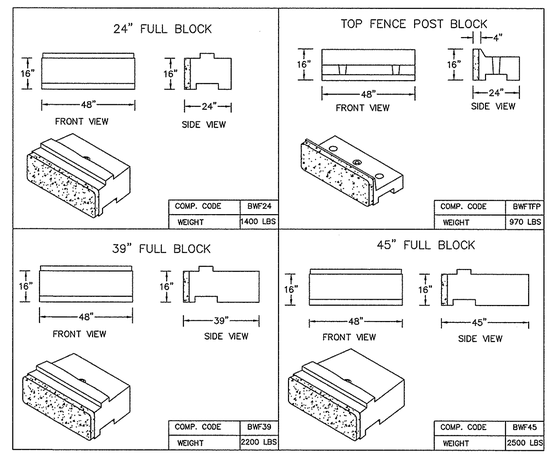

recon SHEA WALL SYSTEM

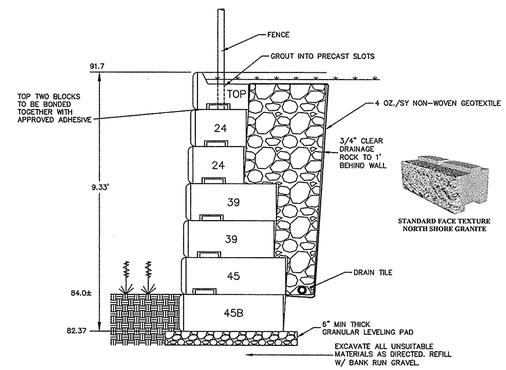

KEY ASSUMPIONS AND NOTES:
1. MAXIMUM HEIGHT NON REINFORCED WALLS VARIES DEPENDING ON SOILS AND SITE CONDITIONS HIGHER WALLS BUILT USING GEO–GRID.
2. CONCRETE: 4,000 PSI MINIMUM AFTER 28 DAYS.
3. STANDARD FACE TEXTURE: NORTH SHORE GRANITE OR AVAILABLE BY SPECIAL ORDER: RUSTIC, LIMESTONE, OLD WORLD.
4. MINIMUM TURNING RADIUS 15 FEET.
5. 1" SETBACK PER ROW ON A STRAIGHT WALL (ANGLE OF BATTER 3.6°) CURVEDWALL 1–2.7" PER ROW.
6. THIS WALL CROSS SECTION IS FOR A SPECIFIC SET OF SITE CONDITIONS. EACH WALL SHOULD BE PROPERLY DESIGNED AND ENGINEERED FOR SITE CONDITIONS.

recon SHEA WALL SYSTEM
TYPICAL WALL CROSS SECTION

RETAINING WALL DETAILS

NOT TO SCALE

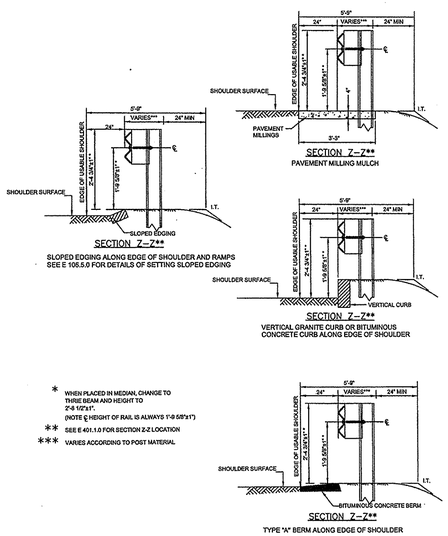

* WHEN PLACED IN MEDIAN, CHANGE TO THRIE BEAM AND HEIGHT TO 2'-8 1/2"±1". (NOTE ℄ HEIGHT OF RAIL IS ALWAYS 1'-9 5/8"±1")
** SEE E 401.1.0 FOR SECTION Z-Z LOCATION
*** VARIES ACCORDING TO POST MATERIAL

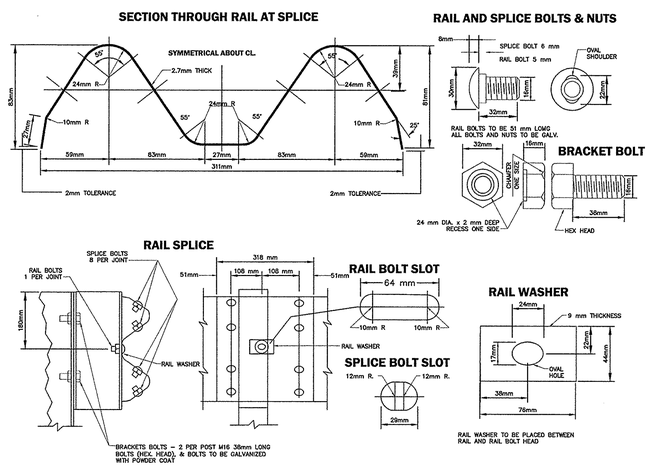

GUARDRAIL DETAILS

NOT TO SCALE

REFER TO MHD CONSTRUCTION STANDARD DETAILS 401.1.0R, 401.7.0 AND 401.8.0 FOR STEEL BEAM HIGHWAY GUARD RAIL, TYPE SS.

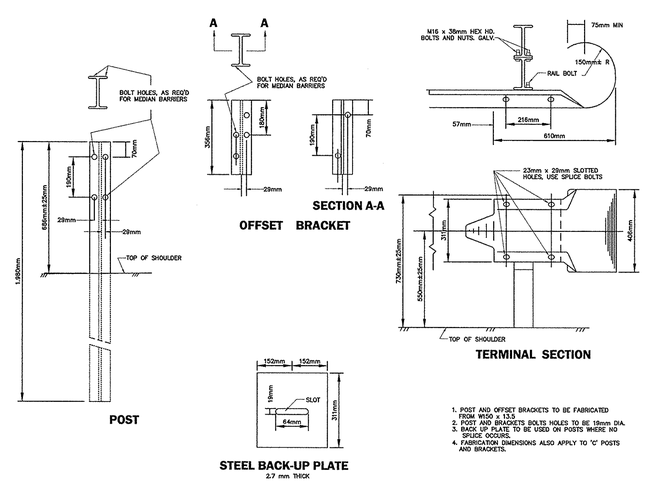

1. POST AND OFFSET BRACKETS TO BE FABRICATED FROM W150 x 13.5
2. POST AND BRACKETS BOLTS HOLES TO BE 19mm DIA.
3. BACK UP PLATE TO BE USED ON POSTS WHERE NO BRACKETS ARE USED.
4. FABRICATION DIMENSIONS ALSO APPLY TO 'C' POSTS AND BRACKETS.

CIVIL:

DRW:	AAS	DSG:	AAS	CHK:	DJC	REV.	DESCRIPTION	DATE

ROADWAY DETAILS

CULVERT AND ROADWAY UPGRADE AT WEST STREET OVER THE PARKER RIVER
MASSACHUSETTS EMERGENCY MANAGEMENT AGENCY
HAZARD MITIGATION GRANT PROGRAM
HMGP-1813-19

Prepared For
TOWN OF GEORGETOWN
GEORGETOWN, MASSACHUSETTS

COUGHLIN ENVIRONMENTAL SERVICES, LLC
CONSULTING ENGINEERS AND PLANNERS
62 Montvale Avenue
Stoneham, MA 02180-3637
Phone: (781) 832-1002
Fax: (781) 438-9654
Email: mail@coughlinenvironmental.com

DATE: JUNE 2012
Q:\Projects\2510-10 West HMGP Georgetown\CAD\base.dwg
CES NO.: 2510-01 | SCALE: AS NOTED

© 2012 COUGHLIN ENVIRONMENTAL SERVICES, LLC

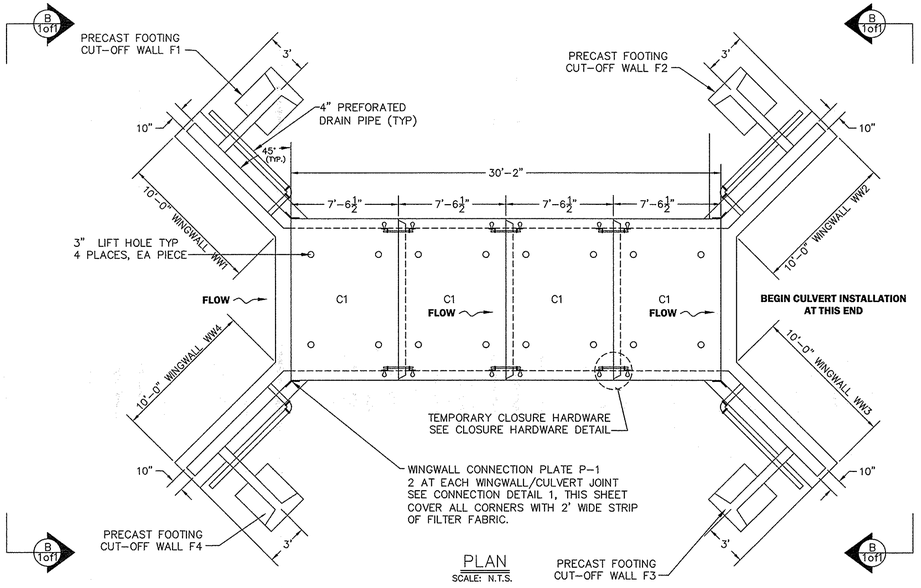

PLAN
SCALE: N.T.S.

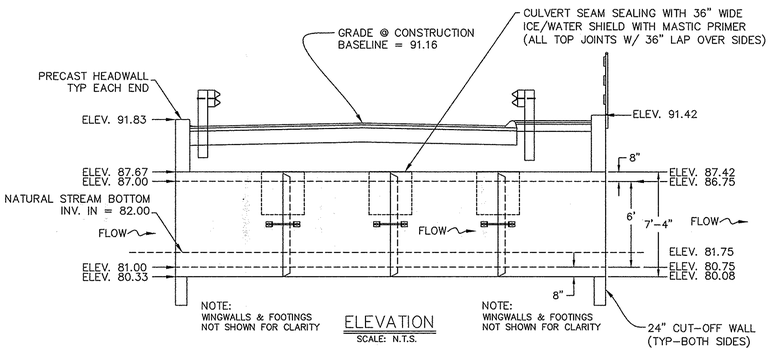

ELEVATION
SCALE: N.T.S.

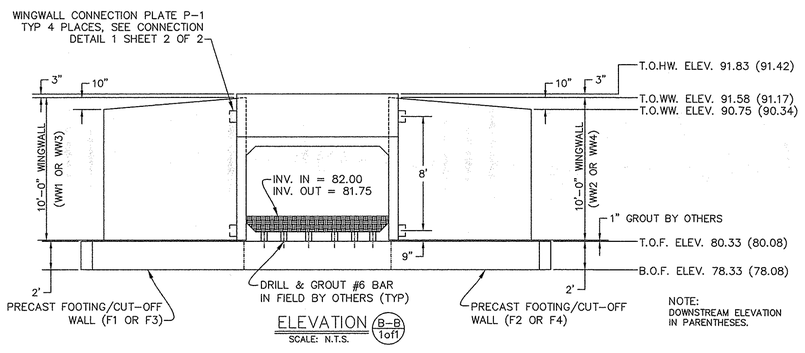

ELEVATION (B-B / 1of1)
SCALE: N.T.S.

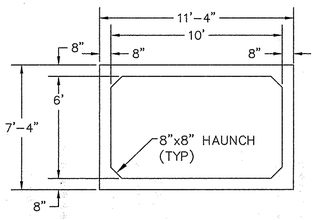

TYP BOX CULVERT SECTION
SCALE: N.T.S.

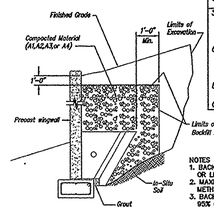

BACKFILL DESCRIPTION								
Group Classification	A-1		A-3	A-2				A-4
	A-1-a	A-1-b		A-2-4	A-2-5	A-2-6	A-2-7	
Sieve Analysis, Percent Passing								
No. 10	50 max.							
No. 40	30 max.	50 max.	51 min.					
No. 200	15 max.	25 max.	10 max.	35 max.	35 max.	35 max.	35 max.	36 min.
Characteristics of Fraction Passing No. 40								
Liquid Limit				40 max.	41 min.	40 max.	41 min.	40 max.
Plasticity Index	6 max.		N.P.	10 max.	10 max.	11 min.	11 min.	10 max.
Usual Types of Significant Constituent Materials	Stone Fragments, Gravel & Sand		Fine Sand	Silty or Clayey Gravel and Sand				Silty Soils
General Rating as Subgrade	Excellent to Good							Fair to Poor

NOTES
1. BACKFILLING OPERATIONS WITHIN THE C.B.Z. SHALL BE PERFORMED IN LIFTS OF 8" OR LESS (LOOSE DEPTH).
2. MAXIMUM DRY DENSITY SHALL BE DETERMINED BY AASHTO T-99 OR OTHER APPROVED METHODS.
3. BACKFILL SHALL BE COMPACTED IN LAYERS UNTIL THE DENSITY IS NOT LESS THAN 95% OF THE MAXIMUM DRY DENSITY.

WINGWALL BACKFILL REQUIREMENTS

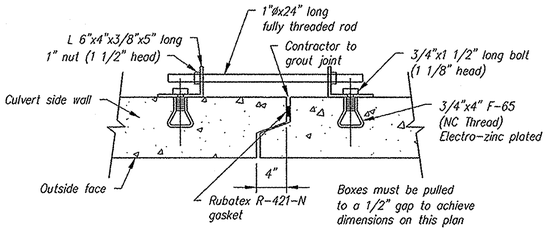

Closure hardware is temporary and is to be removed after installation

JOINT DETAIL

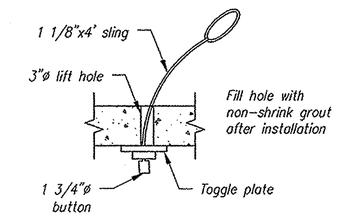

CULVERT LIFTING DETAIL

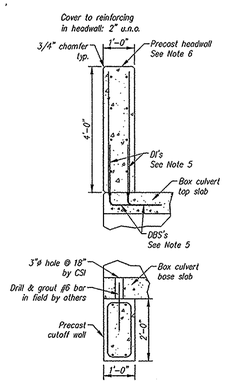

SECTION A

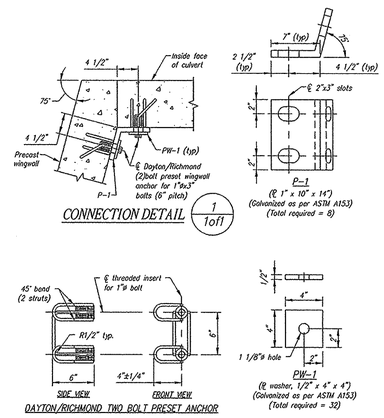

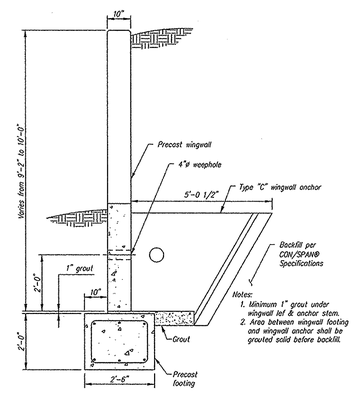

TYPICAL WINGWALL SECTION

GENERAL NOTES

1. REFERENCE STANDRADS:
   AASHTO "STANDARD SPECIFICATIONS FOR HIGHWAY BRIDGES"
   ASTM C1433
2. DESIGN PARAMETERS:
   LIVE LOAD: AASHTO HS20
   EARTH COVER: 6'
   CONCRETE: DESIGN STENGTH F'C = 5,000 PSI
   UNIT WEIGHT = 150 PCF
   REINFORCING: ASTM A615 (REBAR), GRADE 60
   ASTM A185 (WWF) FY = 65 KSI
   SOIL: UNIT WEIGHT = 120 PCF
   MINIMUM LATERAL PRESSURE COEFFICIENT .25
   MAXIMUM LATERAL PRESSURE COEFFICIENT .50
   COVER TO REINFORCING: 1 1/2" U.N.O.
3. DIMENSIONS INCLUDE A JOINT CAP. ACTUAL CULVERT PIECE LENGTH ½" SHORTER (i.e. C2 = 7'-6").
4. NO DAMPPROOFING SUPPLIED BY CSI.
5. DBS ARE DOWEL BAR SPLICERS AND DI ARE DOWEL INS.
6. PRECAST HEADWALLS NOT DESIGNED FOR IMPACT LOAD.
7. FILL 1' GAP BETWEEN BOX CULVERTS WITH LEON SAND OR NON-SHRINK GROUT.

WINGWALL NOTES

GENERAL NOTES:

1. THE WINGWALLS HAVE BEEN DESIGNED FOR GENERAL SITE CONDITIONS. THE PROJECT ENGINEER SHALL BE RESPONSIBLE FOR THE STRUCTURE'S SUITABILITY TO THE EXISTING SITE CONDITIONS AND FOR THE HYDRAULIC EVALUATION --- INCLUDING SCOUR AND CONFIRMATION OF SOIL CONDITIONS
2. PRIOR TO CONSTRUCTION, CONTRACTOR MUST VERIFY ALL ELEVATIONS SHOWN THROUGH THE ENGINEER.

DESIGN DATA

DESIGN METHOD: LOAD FACTOR PER AASHTO SPECIFICATION WINGWALLS DESIGNED FOR EARTH PRESSURE ASSUMED ALLOWABLE SOIL BEARING: 3,000 PSF

PIECE SCHEDULE (MX-FX5,000SC)					
MARK	QTY	LENGTH	YDS	WEIGHT	
C1	4	7.50'	6.30	12.75	TONS

WINGWALL/FOOTING PIECE SCHEDULE (MX-FA4,000SC)					
MARK	QTY	LENGTH	YDS	WEIGHT	
WW1	1	10.00'	2.97	6.78	TONS
WW2	1	10.00'	2.97	6.78	TONS
WW3	1	10.00'	2.97	6.78	TONS
WW4	1	10.00'	2.97	6.78	TONS
F1	1	21.05'	3.04	6.16	TONS
F2	1	21.05'	3.04	6.16	TONS
F3	1	21.05'	3.04	6.16	TONS
F4	1	21.05'	3.04	6.16	TONS

THE DESIGN ASPECTS AND DETAILS PRESENTED ON THIS PLAN HAVE UTILITIZED BASE DRAWING PREPARED FOR CES BY CONCRETE SYSTEMS INC. (CSI) FINAL SHOP DRAWING MAY VARY SUBJECT TO ENGINEER APPROVAL. THIS PLAN SHEET IS PRESENTED FOR REFERENCE ONLY. CONTRACTOR TO FIELD VERIFY ALL DIMENSIONS AND ELEVATIONS PRIOR TO FABRICATION.

CSI Concrete Systems Inc.
9 Commercial St., Hudson, NH,03051
Phone 603-889-4163
Fax 603-889-2417

CIVIL: DANIEL L. COUGHLIN, No. 34843, COMMONWEALTH OF MASSACHUSETTS, REGISTERED PROFESSIONAL ENGINEER, 11/28/2012

DRW: EA	DSG: AAS	CHK: DJC		
1	ADDED CULVERT SEAM SEALING		11/28/2012	
REV.	DESCRIPTION		DATE	

BOX CULVERT LAYOUT AND DETAILS

CULVERT AND ROADWAY UPGRADE AT WEST STREET OVER THE PARKER RIVER
MASSACHUSETTS EMERGENCY MANAGEMENT AGENCY
HAZARD MITIGATION GRANT PROGRAM
HMGP-1813-19

Prepared For
TOWN OF GEORGETOWN
GEORGETOWN, MASSACHUSETTS

COUGHLIN ENVIRONMENTAL SERVICES, LLC
CONSULTING ENGINEERS AND PLANNERS
62 Montvale Avenue
Stoneham, MA 02180-3637
Phone: (781) 832-1002
Fax: (781) 438-9654
Email: mail@coughlinenvironmental.com

DATE: JUNE 2012
Q:\Projects\2510-10 West HMGP Georgetown\CAD\DETAILS.dwg
CES NO.: 2510-01 | SCALE: N.T.S.

© 2012 COUGHLIN ENVIRONMENTAL SERVICES, LLC

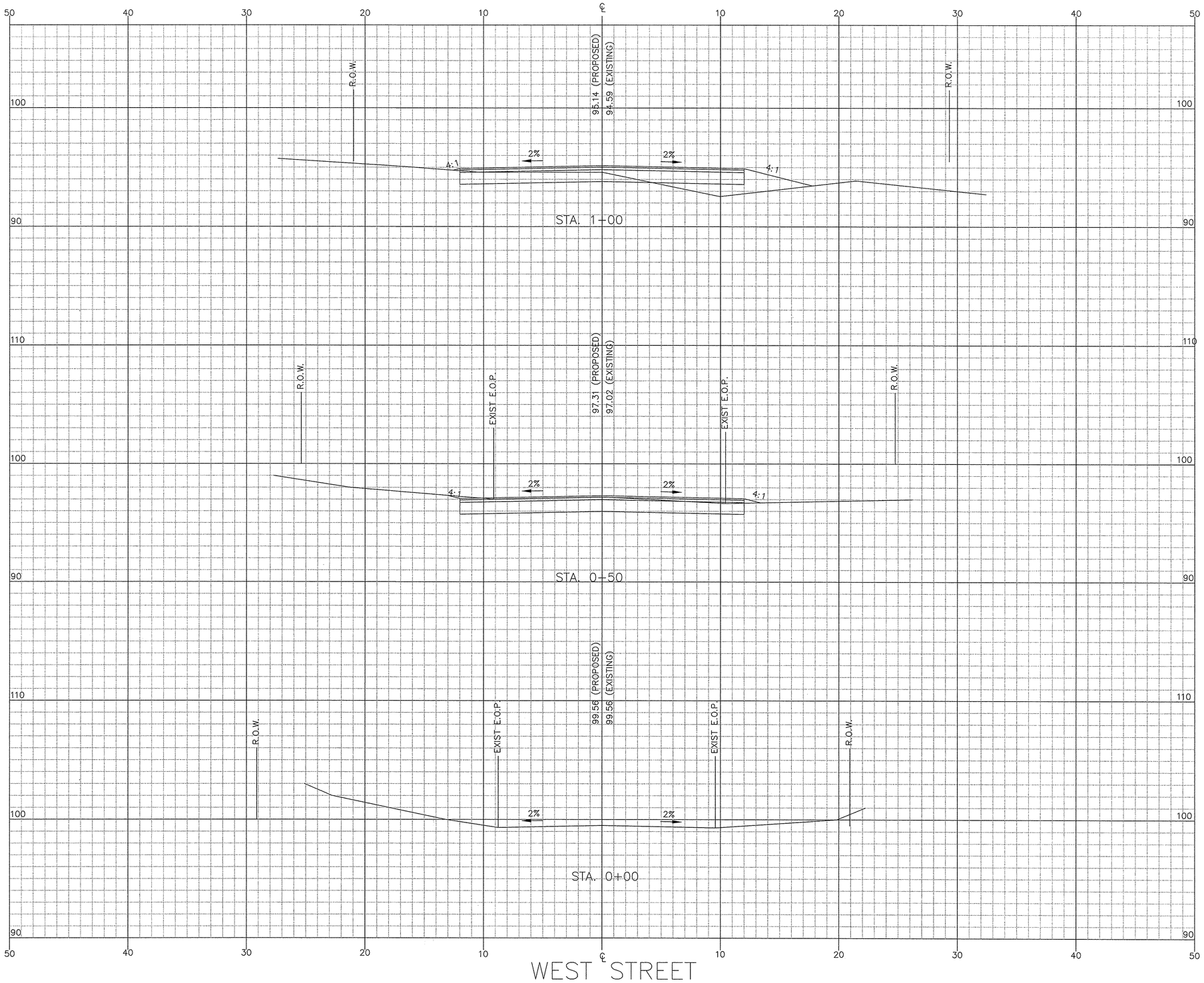

REV.	DESCRIPTION	DATE

DRW: AAS DSG: AAS CHK: DJC

CIVIL:

DANIEL J. COUGHLIN CIVIL No. 33350 COMMONWEALTH OF MASSACHUSETTS PROFESSIONAL ENGINEER

WEST STREET CROSS SECTIONS STA. 0+00 TO STA. 1+00

CULVERT AND ROADWAY UPGRADE AT WEST STREET OVER THE PARKER RIVER
MASSACHUSETTS EMERGENCY MANAGEMENT AGENCY
HAZARD MITIGATION GRANT PROGRAM
HMGP-1813-19

Prepared For
TOWN OF GEORGETOWN
GEORGETOWN, MASSACHUSETTS

COUGHLIN ENVIRONMENTAL SERVICES, LLC
CONSULTING ENGINEERS AND PLANNERS
62 Montvale Avenue
Stoneham, MA 02180-3637
Phone: (781) 832-1002
Fax: (781) 438-9654
Email: mail@coughlinenvironmental.com

DATE: JUNE 2012
Q:\Projects\2510-10 West HMGP Georgetown\CAD\base.dwg
CES NO.: 2510-01 SCALE: 1" = 4'

© 2012 COUGHLIN ENVIRONMENTAL SERVICES, LLC

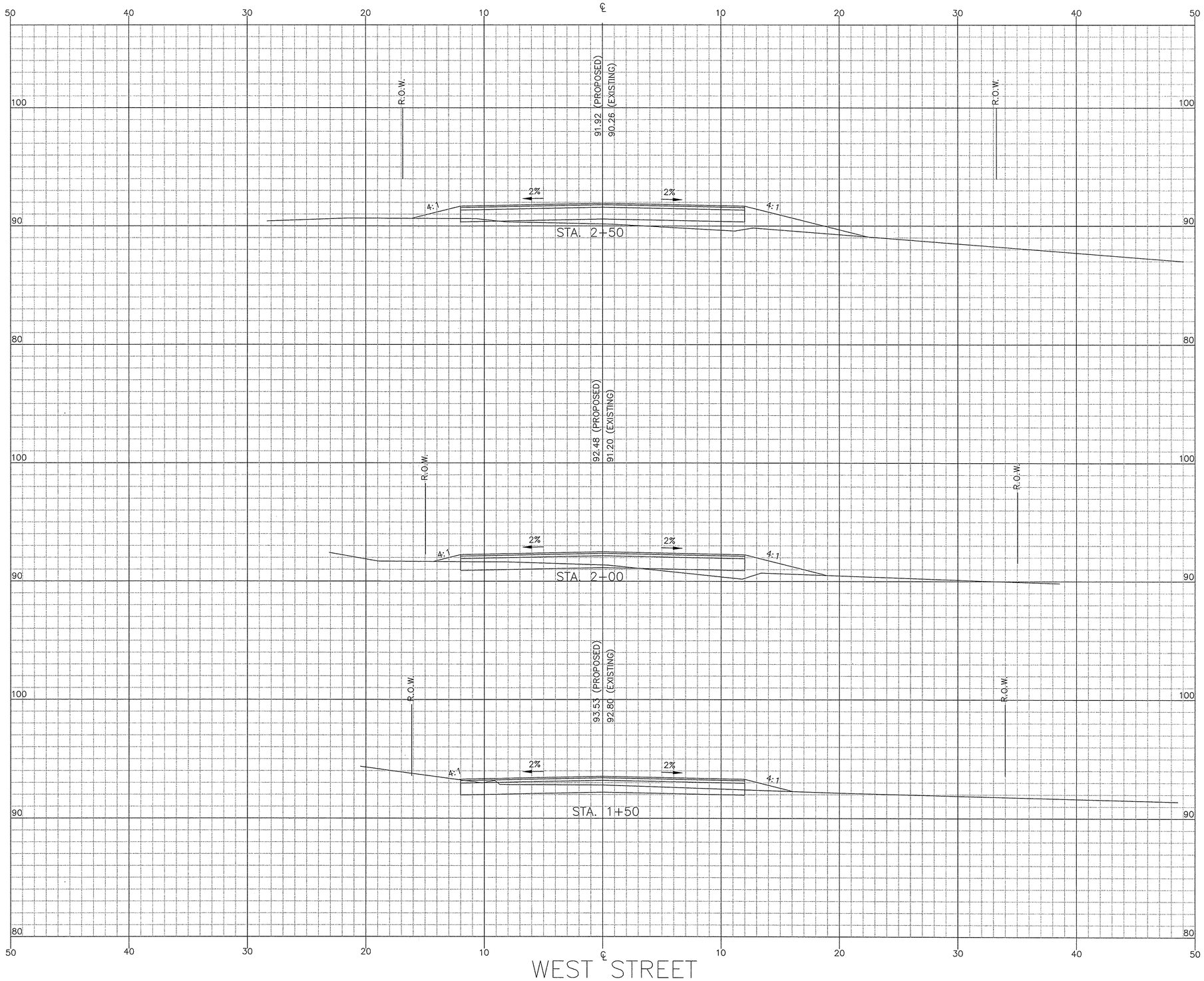

© 2012 COUGHLIN ENVIRONMENTAL SERVICES, LLC

CIVIL:

DANIEL J. COUGHLIN
CIVIL
No. 33355
REGISTERED PROFESSIONAL ENGINEER
COMMONWEALTH OF MASSACHUSETTS

REV.	DESCRIPTION	DATE

DRW: AAS | DSG: AAS | CHK: DJC

WEST STREET
CROSS SECTIONS
STA. 1+50 TO STA. 2+50

CULVERT AND ROADWAY UPGRADE AT WEST STREET OVER THE PARKER RIVER
MASSACHUSETTS EMERGENCY MANAGEMENT AGENCY
HAZARD MITIGATION GRANT PROGRAM
HMGP-1813-19
Prepared For
TOWN OF GEORGETOWN
GEORGETOWN, MASSACHUSETTS

COUGHLIN ENVIRONMENTAL SERVICES, LLC
CONSULTING ENGINEERS AND PLANNERS
62 Montvale Avenue
Stoneham, MA 02180-3637
Phone: (781) 832-1002
Fax: (781) 438-9654
Email: mail@coughlinenvironmental.com

DATE: JUNE 2012
Q:\Projects\2510-10 West HMGP Georgetown\CAD\base.dwg
CES NO.: 2510-01 | SCALE: 1" = 4'